Sirectifier®

ETATRONIC®

Power Semiconductors

- IGBT
- MOSFET
- FRED
- Thyristor
- Triac
- Schottky Diode
- Rectifier Diode
- Transistor
- SiC Diode
- SiC MOSFET

CATALOGUE

2023-2025

产品样本

江苏亿塔电子科技有限公司

ETATRONIC Technology Co., Ltd.

目录 CONTENTS

- 产品命名方法 Products Nomenclature P2~5
  - IGBT、MOSFET分立器件和功率模块命名方法 IGBT Discretes and Power Modules Nomenclature P2~3
  - 晶闸管、整流管分立器件和功率模块命名方法 Thyristor / Diode Discretes and Power Modules Nomenclature P4
  - 碳化硅SiC分立器件和功率模块命名方法 SiC Schottky Diodes and SiC MOSFET Discretes and Power Module Nomenclature P5
- IGBT绝缘栅双极型晶体管 (IGBTs) P6~9
  - IGBT分立器件 IGBT Discretes P6
  - IGBT功率模块 IGBT Power Modules P7~9
- MOSFET场效应晶体管 (MOSFETs) P10
  - MOSFET分立器件 MOSFET Discretes P10
- 快恢复二极管 Fast Recovery Diodes P11~16
  - 超快恢复二极管 Ultra Fast Recovery Diodes P11
  - 软恢复特性高性能高结温超快恢复外延二极管 Soft Recovery Behaviour HiPer High Tjm Ultra Fast Recovery Epitaxial Diodes P12~13
  - 软恢复特性超快恢复外延二极管模块 Soft Recovery Behaviour Ultra Fast Recovery Epitaxial Diode Modules P14~16
- 功率晶体管 (Power Transistors) P17
  - 功率晶体管分立器件 Power Transistor Discretes P17
- 晶闸管(可控硅) Thyristors（SCRs P18~33
  - 晶闸管(可控硅)分立器件 Thyristor Discretes（SCRs） P18~19
  - 晶闸管-晶闸管模块 Thyristor-Thyristor Modules P20~25
  - 晶闸管-二极管模块 Thyristor-Diode Modules P26~30
  - 反并联晶闸管模块（固态交流开关） Anti-Paralled Thyristor-Thyristor Modules (Solid State AC Switches) P31
  - 单相桥式半控模块(带续流二极管) Single Phase Half Controlled Bridge Modules with Free Wheeling Diode P32
  - 三相桥式半控模块(带续流二极管) Three Phase Half Controlled Bridge Modules with Free Wheeling Diode P32
  - 三相桥式半控模块(不带续流二极管) Three Phase Half Controlled Bridge Modules without Free Wheeling Diode P32
  - 三相桥式全控模块(不带续流二极管) Three Phase Full Controlled Bridge Modules without Free Wheeling Diode P32
  - 三相半桥式晶闸管模块（晶闸管电焊机专用） Three Phase Thyristor Half Bridge Modules（For Welding Machines） P33
- 肖特基势垒二极管 Schottky Barrier Diodes P34~36
  - 高结温低漏电流肖特基势垒二极管 High Tjm Low IRRM Schottky Barrier Diodes P34
  - 高结温低漏电流肖特基势垒二极管模块 High Tjm Low IRRM Schottky Barrier Diode Modules P35~36
- 整流二极管 Diode Rectifiers P37~41
  - 整流二极管分立器件 Diode Discretes P37
  - 单相整流桥 Single Phase Bridge Rectifiers P38
  - 单相桥式整流模块 Single Phase Bridge Rectifier Modules P38
  - 三相桥式整流模块 Three Phase Bridge Rectifier Modules P39~40
  - 二极管-二极管整流模块 Diode-Diode Modules P41
- 双向可控硅 Triacs P42
  - 绝缘式双向可控硅 Isolated Triacs P42
  - 非绝缘式双向可控硅 Non-Isolated Triacs P42
- SiC碳化硅器件 SiC Power Devices P43
  - SiC碳化硅肖特基二极管分立器件 SiC Schottky Diode Discretes P43
  - SiC碳化硅MOSFET分立器件 SiC MOSFET Discretes P9
- 功率半导体产品外形结构图 Power Semiconductors Outline Drawings P44~53

© 2023 ETATRONIC All rights reserved
Tel: +86-519-86800000 Fax: +86-519-83888666 E-mail: sales@etatronic.com www.etatronic.com

IGBT分立器件和功率模块命名方法
IGBT Discretes and Power Modules Nomenclature

IGBT分立器件命名方法
IGBT Discretes Nomenclature

S G 40 T 120 U D B2

S: SIRECTIFIER brand

Circuit Configuration

G: Single switch with one IGBT (for discrete)

Nominal Current

Current Rating , For Example : Ic=40A

Chips Technology

N: NPT IGBT
S: SPT^{+} IGBT
T: Trench Gate Field Stop IGBT
NF: Planar Gate Field Stop IGBT

Voltage

Voltage×10, For Example: 60=600V 65=650V
120=1200V 125=1250V
170=1700V

Free Wheeling Diode

D: With FRD
Empty: Without FRD

Speed Characteristic

Full Current for Free Wheeling Diode
K: Standard Frequency (≤18KHz)
U: High Frequency (>18KHz)
Empty: Half current for Free Wheeling Diode

Package Style

A1: TO-220F
A2: TO-220AB
A3: TO-251(IPAK)
B1: TO-3P
B2: TO-247AD
B3: TO-264
B4: TO-3PF
A4: TO-252(DPAK)
A5: TO-262
A6: TO-263(D^{2}PAK)
B5: TO-247P
S: SOT-227

IGBT功率模块命名方法
IGBT Power Module Nomenclature

S G G 75 T 120 U C1

S: SIRECTIFIER brand

Circuit Configuration

G: Single switch with one IGBT (for discrete)
GO: Single switch with one IGBT and FRD
GG: Half bridge (Phase Leg, two IGBTs with FRDs)
GD: Boost Chopper module
DG: Buck Chopper module
3LG: 3-level IGBT module
4G: H bridge
6G: 3 Phase Inverter(sixpack)
7G: 3P Rectifier+PFC+3Phase IGBT Inverter

Nominal Current

Current Rating , For Example : Ic=75A

Chips Technology

N: NPT IGBT
S: SPT^{+} IGBT
T: Trench Gate Field Stop IGBT
NF: Planar Gate Field Stop IGBT

Voltage

Voltage×10, For Example: 60=600V 65=650V
120=1200V 125=1250V
170=1700V

Speed

K: Standard Frequency
U: High Frequency
S: High Frequency with Half Current FWD

Package Style

C1: 34mm equvilant
C2: 62mm equvilant
C3: 62mm for Single Switch only equvilant
C4: EconoPack 4 equvilant
C5: EconoDual 3 equvilant
C6: EconoPack 2
C6A: EconoPIM 2
C6B: EconoPIM 2
C7: EconoPack 3
C7A: EconoPIM 3
C7B: EconoPIM 3
C9: 4 Packs (H Bridge)
E1: ECO-PAK1
E2: ECO-PAK2
P1: EasyPIM 1B
P2: EasyPIM 2B

© 2023 ETATRONIC All rights reserved
Tel: +86-519-86800000 Fax: +86-519-83888666 E-mail: sales@etatronic.com www.etatronic.com

MOSFET分立器件和功率模块命名方法
MOSFET Discretes and Power Modules Nomenclature

MOSFET分立器件命名方法
MOSFET Discretes Nomenclature

S | **MOS** | **20** | **N** | **50** | **B2**

S: SIRECTIFIER brand

Chips Technology

MOS: Standard Silicon VDMOS
JM: Super Junction MOSFET

Nominal Current

Current Rating , For Example : ID=20A

Channel Type

N: N Channel Enhancement Mode
P: P Channel Enhancement Mode

Voltage

Voltage×10, For Example: 50=500V 06=60V

Package Style

A1: TO-220F
A2: TO-220AB
A3: TO-251(IPAK)
A4: TO-252(DPAK)
A5: TO-262
A6: TO-263(D^2PAK)
B1: TO-3P
B2: TO-247AD
B3: TO-264
B4: TO-3PF
B5: TO-247P
S: SOT-227

IGBT功率模块命名方法
IGBT Power Module Nomenclature

S | **MM** | **100** | **N** | **10** | **C1**

S: SIRECTIFIER brand

Circuit Configuration

MO: Single switch with one MOSFET
MM: Half bridge (Phase Leg, two MOSFETs)
MD: Boost Chopper module
DM: Buck Chopper module
4M: H bridge

Nominal Current

Current Rating , For Example : ID=100A

Channel Type

N: N Channel Enhancement Mode
P: P Channel Enhancement Mode

Voltage

Voltage×10, For Example: 10=100V 06=60V
170=1700V

Package Style

C1: 34mm equvilant
C2: 62mm equvilant
C3: 62mm for Single Switch only equvilant
C9: 4 Pack equvilant

© 2023 ETATRONIC All rights reserved
Tel: +86-519-86800000 Fax: +86-519-83888666 E-mail: sales@etatronic.com www.etatronic.com

晶闸管、整流管分立器件和功率模块命名方法
Thyristor / Diode discretes and Power Modules Nomenclature

晶闸管分立器件命名方法Thyristor Discretes Nomenclature

S TYN 16 65

S: SIRECTIFIER

Circuit Configuration
TYN: Single Die Thyristor (for discrete)
TO:Single Die Thyristor

Nominal Current
Current Rating , For Example : $I_{T(RMS)}$=65A

Voltage
Voltage×100

整流管分立器件命名方法Diode Discretes Nomenclature

S DD 25 N 16

S: SIRECTIFIER

Circuit Configuration
DO: Single Die Diode (for discrete)
DD: Diode-Diode Phase Leg Connection

Voltage
Voltage×100

Gate style
N: Diode

Nominal Current
Current Rating , For Example : IF=25A

晶闸管、整流管功率模块命名方法Thyristor 、 Diode Power Modules Nomenclature

S T T 90 GK 16 B

S: SIRECTIFIER

Circuit Configuration
TYN: Single Die Thyristor (for discrete)
TO:Single Die Thyristor
TT:Thyristor-Thyristor Phase Leg Module
TA:Thyristor-Thyristor Common Anode Module
TK:Thyristor-Thyristor Common Cathode Module
TD:Thyristor-Diode Phase Leg Module
DT:Diode-Thyristor Phase Leg Module
SAC: Solid State AC Switch
1PHB: Single Phase Half Controlled Bridge Module
3PHB: Three Phase Half Controlled Bridge Module
3PFB: Three Phase Full Controlled Bridge Module
3TA: Three Phase Thyristor Half Bridge Module
DO:Single Die Diode (for module)
DD:Diode-Diode Phase Leg Module
DA:Diode-Diode Common Anode Module
DK:Diode-Diode Common Cathode Module
1PDB: Single Phase Bridge Rectifier Module
3PDB: Three Phase Bridge Rectifier Module
DKF:Fast Recovery Diode Common Cathode Module
DAF:Fast Recovery Diode Common Anode Module
DEF:Fast Recovery Diode Phase Leg Module
DF:Single Die Fast Recovery Diode Module

Package Style
B: With Copper Baseplate
BT: Pressure Contact Technology with BusBar Terminal
PT: Pressure Contact Technology with Screw Terminal
Without Suffix: DCB Baseplate
NB: Non-Isolated with Copper Baseplate
P: Plastic Flat Full package Isolated
S: SOT-227

Voltage
Voltage×100
For Example: 16=1600V

Gate style
GK: With Gate and assistant Cathode
G: With Gate and without assistant Cathode
N: Diode module

Nominal Current
Current Rating , For Example : IT=90A

双向可控硅命名方法Triac discretes and Power Modules Nomenclature

S BTA 41 - 600 BW

S: SIRECTIFIER

Circuit Configuration
BTA: Isolated package
BTB: Non-Isolated package

Nominal Current
Current Rating
For Ex: IT(RMS)=41A,

Sensitivity and type
B=50mA standard , BW=50mA snubberless
C=25mA standard , SW=35mA snubberless
SW=10mA logic level

Voltage
Voltage, 600=600V

© 2023 ETATRONIC All rights reserved
Tel: +86-519-86800000 Fax: +86-519-83888666 E-mail: sales@etatronic.com www.etatronic.com

SiC碳化硅肖特基二极管分立器件和MOSFET命名方法
SiC Schottky Barrier Diode Discretes and SiC MOSFET Nomenclature

SiC碳化硅肖特基二极管分立器件命名方法
SiC Schottky Diode Discretes Nomenclature

S	CD	20	65	CT	A2

S: SIRECTIFIER brand

Chips Type

CD: SiC Schottky Diode

Nominal Current

Current Rating , For Example : I_{FAV}=20A

Voltage

Voltage×10, For Example: 65=650V 120=1200V

Connetion

CT: Common Cathode in TO-220

PT: Common Cathode in TO-247

Empty: Single Chip

Package Style

A1: TO-220F
A2: TO-220AB
A3: TO-251(IPAK)
B1: TO-3P
B2: TO-247AD
B3: TO-264
B4: TO-3PF
A11: TO-220F-2L
A21: TO-220AC
B11: TO-3P-2L
B21: TO-247AC
A4: TO-252(DPAK)
A5: TO-262
A6: TO-263(D^2PAK)
B5: TO-247P
S: SOT-227
B51: TO-247P-2L

SiC碳化硅MOSFET分立器件命名方法
SiC MOSFET Discretes Nomenclature

S	CM	60	120	R40	B2

S: SIRECTIFIER brand

Chips Type

CM: SiC N Channel Enhancement Mode MOSFET

Nominal Current

Current Rating , For Example : ID=60A

Voltage

Voltage×10, For Example: 65=650V 120=1200V

RDS(ON)

R40: 40mΩ
R80: 80mΩ

Package Style

A1: TO-220F
A2: TO-220AB
A3: TO-251(IPAK)
B1: TO-3P
B2: TO-247AD
B3: TO-264
B4: TO-3PF
A4: TO-252(DPAK)
A5: TO-262
A6: TO-263(D^2PAK)
B5: TO-247P
S: SOT-227

© 2023 ETATRONIC All rights reserved
Tel: +86-519-86800000 Fax: +86-519-83888666 E-mail: sales@etatronic.com www.etatronic.com

IGBT分立器件
IGBT Discretes

型号 TYPE	电气特性Electrical Characteristics						封装外形 Package Style	内部电路 Circuits	外形图 Outlines
	V_{CES}	I_{C90} Tc=90℃	V_{CEsat} @25°C typ.	E_{OFF} @125°C typ.	I_F (FWD) T_C=90°C	$R_{th(J-C)}$			
	V	A	V	mJ	A	K/W			
SG20T65DA2	650	20	1.60	0.10	20	0.90	TO-220AB	1	TO-220AB
SG20T65DA1	650	20	1.60	0.10	20	1.10	TO-220F	1	
SG20T65DA6	650	20	1.60	0.10	20	0.95	TO-263	1	
SG30T65DB2	650	30	1.80	0.15	30	1.60	TO-247AD	1	
SG40T65DB2	650	40	1.80	0.82	20	0.80	TO-247AD	1	
SG40T65UDB2	650	40	1.80	0.82	40	0.78	TO-247AD	1	
SG50T65UDB2	650	50	1.80	1.25	50	0.45	TO-247AD	1	TO-220F
SG75T65B2	650	75	1.80	3.10	-	0.38	TO-247AD	2	
SG75T65UDB2	650	75	1.80	3.10	75	0.35	TO-247AD	1	
SG80T65B2	650	80	1.80	3.25	-	0.28	TO-247AD	2	
SG80T65UDB3	650	80	1.80	3.25	80	0.23	TO-264	1	
SG100T65UDB3	650	100	1.80	5.05	100	0.20	TO-264	1	TO-263
SG100T60S	600	100	1.75	1.34	-	0.385	SOT-227	4	
SG100T60DS	600	100	1.75	1.34	100	0.38	SOT-227	3	
SG120T65UDB5	650	120	1.80	5.80	120	0.25	TO-247P	1	
SG120T65UDB3	650	120	1.80	5.80	120	0.23	TO-264	1	
SG160T60DB3	600	80	2.10	2.65	25	0.36	TO-264	1	TO-247AD
CT60AM-18F	900	60	2.10	2.85	20	0.35	TO-264	1	
SG10T120UDB2	1200	10	1.60	0.50	10	0.69	TO-247AD	1	
SG15T120UDB2	1200	15	1.90	0.28	15	0.63	TO-247AD	1	
SG25T120DB2	1200	25	2.00	2.90	15	0.40	TO-247AD	1	
SG25T120UDB2	1200	25	2.00	2.90	25	0.38	TO-247AD	1	
SG40T120DB2	1200	40	2.00	0.80	20	0.45	TO-247AD	1	TO-264
SG40T120UDB2	1200	40	2.00	0.80	40	0.45	TO-247AD	1	
SG40T120DB3	1200	40	2.00	0.80	20	0.43	TO-264	1	
SG50T120DB3	1200	50	2.10	0.80	20	0.54	TO-264	1	
SG50T120DB5	1200	50	2.10	0.80	20	0.56	TO-247P	1	
SG60T120DB3	1200	60	2.30	0.80	30	0.38	TO-264	1	
SG60T120UDB3	1200	60	2.30	2.85	60	0.35	TO-264	1	
SG60T121UDB3	1200	60	2.10	2.85	60	0.35	TO-264	1	SOT-227
SG75T120UDB3	1200	75	2.10	2.40	75	0.32	TO-264	1	
SG75T120DS	1200	75	2.10	2.40	75	0.34	SOT-227	3	
SG15N135RCB2	1350	15	1.90	0.28	8	0.54	TO-247AD	1	
SG20N135RCB2	1350	20	2.00	0.32	12	0.45	TO-247AD	1	

内部电路图 Circuit

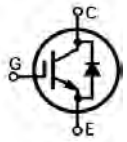

Circuit 1

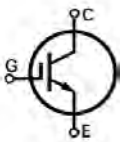

Circuit 2

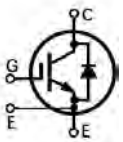

Circuit 3

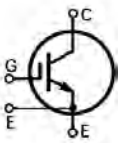

Circuit 4

© 2023 ETATRONIC All rights reserved
Tel: +86-519-86800000 Fax: +86-519-83888666 E-mail: sales@etatronic.com www.etatronic.com

IGBT功率模块
IGBT Power Modules

型号 TYPE	电气特性Electrical Characteristics						封装外形 Package Style	内部电路 Circuit	外形图 Outlines
	V_{CES}	I_{C25} Tc=25℃	I_{C90} Tc=90℃	V_{CEsat} @25°C typ.	E_{OFF} @125°C typ.	$R_{th(J-C)}$			
	V	A	A	V	mJ	K/W			
T Series: 600-650V Half Bridge IGBT Module									
SGG50T60UC1	600	100	50	1.65	1.90	0.68	C1 (Fig.1)	1	C1 (Fig.1)
SGG75T60UC1	600	150	75	1.55	1.80	0.57	C1 (Fig.1)	1	
SGG100T60UC1	600	200	100	1.65	1.34	0.37	C1 (Fig.1)	1	
SGG145T60UC1	600	290	145	1.65	2.40	0.24	C1 (Fig.1)	1	
SGG150T60UC2	600	300	150	1.65	2.40	0.19	C2 (Fig.26)	1	
SGG195T60UC1	600	390	195	1.65	7.80	0.22	C1 (Fig.1)	1	
SGG200T60UC2	600	400	200	1.65	7.80	0.17	C2 (Fig.26)	1	
SGG200T65UC2	650	400	200	1.65	7.80	0.17	C2 (Fig.26)	1	C2 (Fig.26)
SGG300T60UC2	600	600	300	1.65	8.40	0.14	C2 (Fig.26)	1	
SGG300T65UC2	650	600	300	1.65	8.40	0.14	C2 (Fig.26)	1	
SGG400T60UC2	600	800	400	1.65	10.40	0.12	C2 (Fig.26)	1	
T Series: 600-650V Boost Chopper / Buck Chopper IGBT Module									
SGD(SDG)50T60UC1	600	100	50	1.65	1.90	0.68	C1 (Fig.1)	2(3)	
SGD(SDG)75T60UC1	600	150	75	1.55	1.80	0.57	C1 (Fig.1)	2(3)	
SGD(SDG)100T60UC1	600	200	100	1.65	1.34	0.37	C1 (Fig.1)	2(3)	
SGD(SDG)145T60UC1	600	290	145	1.65	2.40	0.24	C1 (Fig.1)	2(3)	C3 (Fig.58)
SGD(SDG)150T60UC2	600	300	150	1.65	2.40	0.19	C2 (Fig.26)	2(3)	
SGD(SDG)195T60UC1	600	390	195	1.65	7.80	0.22	C1 (Fig.1)	2(3)	
SGD(SDG)200T60UC2	600	400	200	1.65	7.80	0.17	C2 (Fig.26)	2(3)	
SGD(SDG)200T65UC2	650	400	200	1.65	7.80	0.17	C2 (Fig.26)	2(3)	
SGD(SDG)300T60UC2	600	600	300	1.65	8.40	0.14	C2 (Fig.26)	2(3)	
SGD(SDG)300T65UC2	650	600	300	1.65	8.40	0.14	C2 (Fig.26)	2(3)	
SGD(SDG)400T60UC2	600	800	400	1.65	10.40	0.12	C2 (Fig.26)	2(3)	
T Series: 1200V Half Bridge IGBT Module									C5 (Fig. 5)
SGG50T120UC1	1200	75	50	1.95	4.50	0.53	C1 (Fig.1)	1	
SGG75T120UC1	1200	100	75	1.95	6.90	0.38	C1 (Fig.1)	1	
SGG100T120UC1	1200	150	100	1.95	10.20	0.27	C1 (Fig.1)	1	
SGG145T120UC1	1200	200	145	1.95	15.80	0.19	C1 (Fig.1)	1	
SGG150T120UC2	1200	200	150	1.95	18.70	0.16	C2 (Fig.26)	1	
SGG200T120UC2	1200	300	200	1.95	20.00	0.14	C2 (Fig.26)	1	
SGG300T120UC2	1200	400	300	1.95	29.00	0.11	C2 (Fig.26)	1	
SGG400T120UC2	1200	600	400	1.95	42.00	0.072	C2 (Fig.26)	1	
SGG450T120UC2	1200	700	450	1.95	49.00	0.062	C2 (Fig.26)	1	
SGO400T120UC3	1200	600	400	1.95	44.00	0.072	C3 (Fig.58)	4	
SGO600T120UC3	1200	900	600	1.95	63.00	0.049	C3 (Fig.58)	4	
SGO800T120UC3	1200	1000	800	1.95	95.00	0.042	C3 (Fig.58)	4	
SGG600T120UC5	1200	900	600	1.95	76.00	0.04	C5 (Fig.5)	5	Circuit 5
SGG700T120UC5	1200	900	700	1.95	65.00	0.084	C5 (Fig.5)	5	

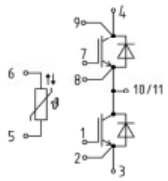

内部电路图Circuit

Half Bridge (SGG Series)

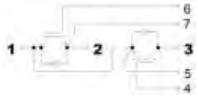

Circuit 1

Boost Chopper (SGD Series)

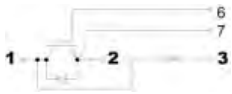

Circuit 2

Buck Chopper (SDG Series)

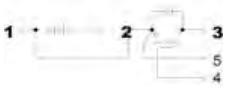

Circuit 3

One Unit (SGO Series)

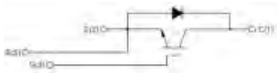

Circuit 4

© 2023 ETATRONIC All rights reserved
Tel: +86-519-86800000 Fax: +86-519-83888666 E-mail: sales@etatronic.com www.etatronic.com

型号 TYPE	电气特性Electrical Characteristics						封装外形 Package Style	内部电路 Circuits	外形图 Outlines
	V_{CES}	I_{C25} Tc=25 ℃	I_{C90} Tc=90 ℃	V_{CEsat} @25°C typ.	E_{OFF} @125° C typ.	$R_{th(J-C)}$			
	V	A	A	V	mJ	K/W			
NF Series: 1200V Half Bridge IGBT Module									
SGG50NF120UC1	1200	100	50	2.05	1.90	0.450	C1 (Fig.1)	1	C1 (Fig.1)
SGG75NF120UC1	1200	150	75	2.05	2.10	0.380	C1 (Fig.1)	1	
SGG75NF120SC1	1200	150	75	2.05	2.10	0.420	C1 (Fig.1)	1	
SGG100NF120UC1	1200	200	100	2.05	2.30	0.310	C1 (Fig.1)	1	
SGG100NF120SC1	1200	200	100	2.10	2.30	0.350	C1 (Fig.1)	1	
SGG145NF120UC1	1200	290	145	2.10	9.30	0.165	C1 (Fig.1)	1	
SGG145NF120SC1	1200	290	145	2.10	9.30	0.210	C1 (Fig.1)	1	C2 (Fig.26)
SGG150NF120UC2	1200	300	150	2.10	9.30	0.125	C2 (Fig.26)	1	
SGG200NF120UC2	1200	400	200	2.10	13.10	0.099	C2 (Fig.26)	1	
SGG300NF120UC2	1200	600	300	2.10	16.20	0.089	C2 (Fig.26)	1	
SGG400NF120UC2	1200	800	400	2.10	25.00	0.072	C2 (Fig.26)	1	
SGO400NF120UC3	1200	800	400	2.10	25.00	0.072	C3 (Fig.58)	4	
SGO600NF120UC3	1200	1200	600	2.10	32.00	0.130	C3 (Fig.58)	4	C3 (Fig.58)
NF Series: 1200V Boost Chopper / Buck Chopper IGBT Module									
SGD(SDG)50NF120UC1	1200	100	50	2.05	1.90	0.450	C1 (Fig.1)	2(3)	
SGD(SDG)75NF120UC1	1200	150	75	2.05	2.10	0.380	C1 (Fig.1)	2(3)	
SGD(SDG)100NF120UC1	1200	200	100	2.05	2.30	0.310	C1 (Fig.1)	2(3)	
SGD(SDG)145NF120UC1	1200	290	145	2.10	9.30	0.165	C1 (Fig.1)	2(3)	
SGD(SDG)150NF120UC2	1200	300	150	2.10	9.30	0.125	C2 (Fig.26)	2(3)	内部电路图Circuit
SGD(SDG)200NF120UC2	1200	400	200	2.10	13.10	0.099	C2 (Fig.26)	2(3)	
SGD(SDG)300NF120UC2	1200	600	300	2.10	16.20	0.089	C2 (Fig.26)	2(3)	**Half Bridge (SGG Series)**
SGD(SDG)400NF120UC2	1200	800	400	2.10	25.00	0.072	C2 (Fig.26)	2(3)	
N125 Series: 1200V Half Bridge IGBT Module									
SGG75N125UC1	1200	75	50	3.00	5.00	0.270	C1 (Fig.1)	1	
SGG100N125UC1	1200	100	75	3.00	3.50	0.180	C1 (Fig.1)	1	Circuit 1
SGG145N125UC1	1200	145	100	3.00	4.50	0.160	C1 (Fig.1)	1	
SGG150N125UC2	1200	150	100	3.00	4.50	0.120	C2 (Fig.26)	1	**Boost Chopper (SGD Series)**
SGG200N125UC2	1200	200	150	3.00	8.00	0.095	C2 (Fig.26)	1	
SGG300N125UC2	1200	300	200	3.00	11.00	0.075	C2 (Fig.26)	1	
SGG400N125UC2	1200	400	300	3.00	18.00	0.050	C2 (Fig.26)	1	
SGO600N125UC3	1200	600	400	3.00	22.00	0.041	C3 (Fig.58)	4	Circuit 2
T Series: 1700V Half Bridge IGBT Module									
SGG75T170UC1	1700	125	75	1.95	29.00	0.304	C1 (Fig.1)	1	**Buck Chopper (SDG Series)**
SGG100T170UC1	1700	160	100	1.95	39.00	0.234	C1 (Fig.1)	1	
SGG145T170UC1	1700	260	145	1.95	59.00	0.162	C1 (Fig.1)	1	
SGG150T170UC2	1700	240	150	1.95	59.00	0.161	C2 (Fig.26)	1	
SGG200T170UC2	1700	300	200	1.95	79.00	0.122	C2 (Fig.26)	1	Circuit 3
SGG300T170UC2	1700	400	300	1.95	121.00	0.083	C2 (Fig.26)	1	
SGG400T170UC2	1700	600	400	1.95	180.00	0.066	C2 (Fig.26)	1	
T Series: 1700V Boost Chopper / Buck Chopper IGBT Module									**One Unit (SGO Series)**
SGD(SDG)75T170UC1	1700	125	75	1.95	29.00	0.304	C1 (Fig.1)	2(3)	
SGD(SDG)100T170UC1	1700	160	100	1.95	39.00	0.234	C1 (Fig.1)	2(3)	
SGD(SDG)145T170UC1	1700	260	145	1.95	59.00	0.162	C1 (Fig.1)	2(3)	Circuit 4
SGD(SDG)150T170UC2	1700	240	150	1.95	59.00	0.161	C2 (Fig.26)	2(3)	
SGD(SDG)200T170UC2	1700	300	200	1.95	79.00	0.122	C2 (Fig.26)	2(3)	

© 2023 ETATRONIC All rights reserved
Tel: +86-519-86800000 Fax: +86-519-83888666 E-mail: sales@etatronic.com www.etatronic.com

型号 TYPE	电气特性Electrical Characteristics						封装外形 Package Style	内部电路 Circuits	外形图 Outlines
	V_{CES}	I_{C25} Tc=25 ℃	I_{C90} Tc=90 ℃	V_{CEsat} @25°C typ.	E_{OFF} @125° C typ.	$R_{th(J-C)}$			
	V	A	A	V	mJ	K/W			
SGD(SDG)300T170UC2	1700	400	300	1.95	121.00	0.083	C2 (Fig.26)	2(3)	
SGD(SDG)400T170UC2	1700	600	400	1.95	180.00	0.066	C2 (Fig.26)	2(3)	
4 Units H-Bridge IGBT Module									C9 (Fig.16)
S4G40T60SC9	600	80	40	1.80	0.80	0.480	C9 (Fig.16)	6	
S4G40T60UC9	600	80	40	1.80	0.80	0.475	C9 (Fig.16)	6	
S4G50T60SC9	600	100	50	1.80	0.90	0.370	C9 (Fig.16)	6	
S4G50T60UC9	600	100	50	1.80	0.90	0.365	C9 (Fig.16)	6	
S4G60T60SC9	600	120	60	1.80	1.10	0.250	C9 (Fig.16)	6	
S4G60T60UC9	600	120	60	1.80	1.10	0.245	C9 (Fig.16)	6	
S4G75T60SC9	600	150	75	1.80	2.00	0.175	C9 (Fig.16)	6	
S4G75T60UC9	600	150	75	1.80	2.00	0.170	C9 (Fig.16)	6	**内部电路图Circuit**
S4G100T60SC9	600	200	100	1.80	2.30	0.155	C9 (Fig.16)	6	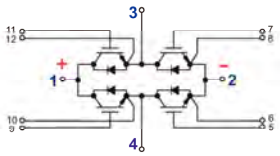
S4G100T60UC9	600	200	100	1.80	2.30	0.150	C9 (Fig.16)	6	
S4G25T120SC9	1200	50	25	1.90	0.65	0.650	C9 (Fig.16)	6	
S4G40T120SC9	1200	80	40	1.95	1.40	0.580	C9 (Fig.16)	6	
S4G50T120SC9	1200	81	50	1.95	4.50	0.530	C9 (Fig.16)	6	
S4G75T120SC9	1200	150	75	1.95	6.30	0.375	C9 (Fig.16)	6	
S4G75N125UC9	1200	75	50	3.10	2.50	0.530	C9 (Fig.16)	6	Circuit 6

碳化硅MOSFET分立器件
SiC MOSFET Discretes

型号 TYPE	电气特性Electrical Characteristics						封装外形 Package Style	沟道极性 Configu -rations	外形图 Outlines
	V_{DSS}	I_{D25} Tc=25 ℃	$R_{DS(ON)}$	I_{DSS}	V_{GSTH}	T_{JMAX}			
	V	A	mΩ	uA	V	℃			
650V Series SiC MOSFET Discretes									TO-247AD
SCM11665R17B2	650	116	17.00	5.00	2.60	150	TO-247AD	N CH	
SCM7865R30B2	650	78	30.00	3.00	2.60	150	TO-247AD	N CH	
SCM3865R60B2	650	38	60.00	2.00	2.60	150	TO-247AD	N CH	
SCM2065R120B2	650	20	120.00	1.00	2.60	150	TO-247AD	N CH	
1200V Series SiC MOSFET Discretes									
SCM80120R25B2	1200	80	25	5.00	2.60	150	TO-247AD	N CH	
SCM60120R40B2	1200	60	40	5.00	2.60	150	TO-247AD	N CH	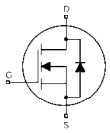
SCM30120R80B2	1200	30	80	2.00	2.60	150	TO-247AD	N CH	
SCM18120R160B2	1200	18	160	1.00	2.60	150	TO-247AD	N CH	
SCM09120R280B2	1200	9	280	1.00	2.60	150	TO-247AD	N CH	**N Channel**

© 2023 ETATRONIC All rights reserved
Tel: +86-519-86800000 Fax: +86-519-83888666 E-mail: sales@etatronic.com www.etatronic.com

功率MOSFET场效应晶体管分立器件
Power MOSFET Discretes

型号 TYPE	电气特性Electrical Characteristics						封装外形 Package Style	内部电路图及沟道极性 Circuits & Configurations
	V_{DSS}	I_{D25} Tc=25℃	$R_{DS(ON)}$	V_{GSS}	V_{TH}	$R_{th(J-C)}$		
	V	A	mΩ	V	V	K/W		
SMOS2333A	-12	-7	19.50	±12	-0.40	50.00	SOT-23-3L	Circuit 1/P CH
SMOS28P06A1	-60	-28	37.00	±20	-2.00	1.39	TO-220F	Circuit 1/P CH
SMOS28P06A6	-60	-28	37.00	±20	-2.00	0.50	TO-263	Circuit 1/P CH
SMOS75N075A2	75	75	6.50	±20	2.00	0.80	TO-220AB	Circuit 2/N CH
SMOS75N075A6	75	75	6.50	±20	2.00	0.85	TO-263	Circuit 2/N CH
SMOS25N10A1	100	25	31.00	±20	2.00	4.79	TO-220F	Circuit 2/N CH
SMOS36N10A2	100	36	17.00	±20	2.00	1.05	TO-220AB	Circuit 2/N CH
SMOS36P10B2	-100	-36	17.00	±20	-2.00	0.40	TO-247AD	Circuit 1/P CH
SMOS40N20A2	200	40	70.00	±20	2.00	0.50	TO-220AB	Circuit 2/N CH
SMOS40N20A6	200	40	70.00	±20	2.00	0.52	TO-263	Circuit 2/N CH
SMOS50N20A2	200	50	50.00	±20	2.00	0.45	TO-220AB	Circuit 2/N CH
SMOS50N20A6	200	50	50.00	±20	2.00	0.47	TO-263	Circuit 2/N CH
SMOS60N20A2	200	60	42.00	±20	2.00	0.42	TO-220AB	Circuit 2/N CH
SMOS50N25A2	250	50	31.00	±20	2.00	0.50	TO-220AB	Circuit 2/N CH
SMOS50N25A6	250	50	31.00	±20	2.00	0.52	TO-263	Circuit 2/N CH
SMOS50N25B2	250	50	50.00	±20	3.00	0.57	TO-247AD	Circuit 2/N CH
SMOS38N26A1	260	38	14.00	±20	2.00	3.80	TO-220F	Circuit 2/N CH
SMOS11N45A1	450	11	530.00	±20	2.00	4.20	TO-220F	Circuit 2/N CH
SMOS9N50A2	500	9	800.00	±20	2.00	0.67	TO-220AB	Circuit 2/N CH
SMOS13N50A1	500	13	420.00	±20	2.00	2.15	TO-220F	Circuit 2/N CH
SMOS13N50A2	500	13	420.00	±20	2.00	0.51	TO-220AB	Circuit 2/N CH
SMOS16N50A2	500	16	320.00	±20	2.00	0.49	TO-220AB	Circuit 2/N CH
SMOS16N50B2	500	16	300.00	±20	2.00	0.48	TO-247AD	Circuit 2/N CH
SMOS21N50B2	500	21	250.00	±20	2.00	0.44	TO-247AD	Circuit 2/N CH
IRFP460	500	21	250.00	±20	2.00	0.44	TO-247AD	Circuit 2/N CH
SMOS24N50B3	500	24	160.00	±20	2.00	0.52	TO-264	Circuit 2/N CH
SMOS26N50B3	500	26	200.00	±20	2.00	0.50	TO-264	Circuit 2/N CH
SMOS44N50B3	500	44	120.00	±20	2.00	0.24	TO-264	Circuit 2/N CH
SMOS44N50S	500	44	120.00	±20	2.00	0.70	SOT-227	Circuit 3/N CH
SMOS44N50U2S	500	44	120.00	±20	2.00	0.38	SOT-227	Circuit 5/N CH
SMOS44N50U3S	500	44	120.00	±20	2.00	0.38	SOT-227	Circuit 4/N CH
SMOS48N50S	500	48	100.00	±20	2.00	0.66	SOT-227	Circuit 3/N CH
SMOS48N50U2S	500	48	100.00	±20	2.00	0.26	SOT-227	Circuit 5/N CH
SMOS48N50U3S	500	48	100.00	±20	2.00	0.26	SOT-227	Circuit 4/N CH
SMOS44N80S	800	44	165.00	±20	2.00	0.18	SOT-227	Circuit 3/N CH
SMOS38N100S	1000	38	250.00	±20	2.00	0.14	SOT-227	Circuit 3/N CH
超级结场效应晶体管Super Junction MOSFET(CoolMOSFET)								
SJM24N80A2	800	24	145	±20	3.00	0.98	TO-220AB	Circuit 2/N CH
SJM24N80B2	800	24	145	±20	3.00	0.25	TO-247AD	Circuit 2/N CH
SJM48N80B3	800	48	76	±20	3.00	0.23	TO-264	Circuit 2/N CH
SJM48N80S	800	48	76	±20	3.00	0.28	SOT-227	Circuit 3/N CH

内部电路图 Circuit 及沟道极性 Configuration

Circuit1
P Channel

Circuit2
N Channel

Circuit 3
N Channel for SOT-22

外形图 Outlines

SOT-23-3L

TO-220AB

TO-220F

TO-263

TO-247AD

TO-264

SOT-227

内部电路图 Circuit 及沟道极性 Configuration

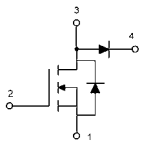

Circuit5
Boost Chopper
N Channel for SOT-227

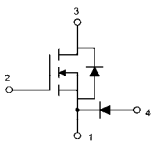

Circuit 4
Buck Chopper
N Channel for SOT-227

© 2023 ETATRONIC All rights reserved
Tel: +86-519-86800000 Fax: +86-519-83888666 E-mail: sales@etatronic.com www.etatronic.com

超快恢复二极管

Ultra Fast Recovery Diodes Tj = - 40°C ~ +125°C, Tjm = +125°C

型号 TYPE	电气特性Electrical Characteristics								封装外形 Package Style	内部电路 Circuits
	V_{RRM}	I_{FAV}	I_{FSM}	I_R at V_R=V_{RRM}		V_{Fmax} at I_F		trr (max)		
				25°C	125°C					
	V	A	A	μA	mA	V	A	ns		
MUR820	200	8	100	2	1	1	8	30	TO-220AC	1
MUR860	600	8	100	2	2	2	8	50	TO-220AC	1
MUR860F	600	8	100	2	2	2	8	50	TO-220F-2L	1
MUR860S	600	8	100	2	2	2	8	50	TO-263	1
MUR1020CT	200	10	100	2	1	1	5	30	TO-220AB	2
MUR1040	400	10	100	3	1	1	10	35	TO-220AC	1
MUR1060CT	600	10	100	3	1	2	5	50	TO-220AB	2
MUR1060CTF	600	10	100	3	1	2	5	50	TO-220F-3L	2
MUR1520	200	15	100	5	3	1	15	30	TO-220AC	1
MUR1540	400	15	100	5	3	1	15	35	TO-220AC	1
MUR1560	600	15	100	5	3	2	15	50	TO-220AC	1
MUR1560F	600	15	100	5	3	2	15	50	TO-220F-2L	1
MUR1560S	600	15	100	5	3	2	15	50	TO-263	1
MUR1620CT	200	16	150	5	10	1	8	30	TO-220AB	2
MUR1620AT	200	16	150	5	10	1	8	30	TO-220AB	3
MUR1640CT	400	16	140	5	10	1	8	35	TO-220AB	2
MUR1640AT	400	16	140	5	10	1	8	35	TO-220AB	3
MUR1640DT	400	15	140	5	10	1	8	35	TO-220AB	4
MUR1660CT	600	16	125	5	10	2	8	50	TO-220AB	2
MUR1660AT	600	16	125	5	10	2	8	50	TO-220AB	3
MUR1660DT	600	16	125	5	10	2	8	50	TO-220AB	4
MUR2020CT	200	20	160	10	10	1	10	30	TO-220AB	2
MUR2020AT	200	20	160	10	10	1	10	30	TO-220AB	3
MUR2020DT	200	20	160	10	10	1	10	30	TO-220AB	4
MUR2040CT	400	20	150	20	10	1	10	35	TO-220AB	2
MUR2040AT	400	20	150	20	10	1	10	35	TO-220AB	3
MUR2040DT	400	20	150	20	10	1	10	35	TO-220AB	4
MUR2060CT	600	20	110	50	1	2	10	50	TO-220AB	2
MUR2060AT	600	20	110	50	1	2	10	50	TO-220AB	3
MUR2060DT	600	20	110	50	1	2	10	50	TO-220AB	4
MUR2960	600	30	250	100	7	2	30	50	TO-220AC	1
MUR2960F	600	30	250	100	7	2	30	50	TO-220F-2L	1
MUR2960S	600	29	250	100	7	2	30	50	TO-263	1
MUR3020CT	200	30	250	5	1	1	15	35	TO-220AB	2
MUR3020	200	30	300	250	1	1	30	35	TO-247AC	1
MUR3020PT	200	30	150	50	3	1	15	35	TO-247AD	2
MUR3030	300	30	300	100	1	1	30	35	TO-247AC	1
MUR3030PT	300	30	150	50	3	1	15	35	TO-247AD	2
MUR3040	400	30	300	100	7	2	30	50	TO-247AC	1
MUR3040PT	400	30	150	50	3	2	15	50	TO-247AD	2
MUR3060	600	30	300	100	7	2	30	50	TO-247AC	1
MUR3060PT	600	30	150	50	3	2	15	50	TO-247AD	2
MUR6020	200	60	600	50	11	1	60	35	TO-247AC	1
MUR6020PT	200	60	325	200	5	1	30	50	TO-247AD	2
MUR6030	300	60	550	200	14	1	60	35	TO-247AC	1
MUR6030PT	300	60	325	200	5	1	30	50	TO-247AD	2
MUR6040	400	60	550	500	14	2	60	50	TO-247AC	1
MUR6040PT	400	60	300	100	7	2	30	50	TO-247AD	2
MUR6060	600	60	550	200	14	2	60	50	TO-247AC	1
MUR6060PT	600	60	300	100	7	2	30	50	TO-247AD	2
MUR12060	600	120	600	3mA	20	2	120	75	TO-247AC	1

外形图 Outlines

TO-220AC

TO-220F-2L

TO-220AB

TO-220F-3L

TO-263

TO-247AC

TO-247AD

内部电路Circuits

MUR****
Circuit 1

MUR**CT(PT)**
Circuit 2

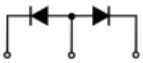

MUR**AT**
Circuit 3

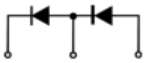

MUR**DT**
Circuit 4

© 2023 ETATRONIC All rights reserved

Tel: +86-519-86800000 Fax: +86-519-83888666 E-mail: sales@etatronic.com www.etatronic.com

软恢复特性高性能高结温超快恢复外延二极管

Soft Recovery Behaviour High-Performance Wide Temperature Range Ultra Fast Recovery Epitaxial Diodes

Tj = -55°C ~ +175°C, Tjm = +175°C

型号 TYPE	电气特性Electrical Characteristics								封装外形 Package Style	内部电路 Circuits	外形图 Outlines
	V_{RRM}	I_{FAV}	I_{FSM}	I_{RRM} at $V_R=V_{RRM}$		V_{Fmax} at I_{FM}		trr (typ)			
				25°C	125°C						
	V	A	A	μA	mA	V	A	ns			
HUR820	200	8	96	10	0.1	1.000	8	25	TO-220AC	1	TO-220F-2L
HUR1020	200	10	150	10	0.1	1.000	10	25	TO-220AC	1	
HUR1520	200	15	220	10	0.1	1.000	15	25	TO-220AC	1	
HUR1520F	200	15	220	10	0.1	1.000	15	25	TO-220F-2L	1	
HUR2020	200	20	250	20	0.2	1.000	20	25	TO-220AC	1	TO-220AC
HUR2520	200	25	300	20	0.2	1.000	25	25	TO-220AC	1	
HUR3020	200	30	360	30	0.3	1.000	30	25	TO-247AC	1	
HUR4020	200	40	480	30	0.3	1.000	40	25	TO-247AC	1	
HUR5020	200	50	600	50	0.5	1.000	50	25	TO-247AC	1	
HUR6020	200	60	720	50	0.5	1.000	60	25	TO-247AC	1	TO-220AB
HUR2020CTA1	200	2X10	150	10	0.1	1.000	10	25	TO-220F-3L	2	
HUR2020CTA2	200	2X10	150	10	0.1	1.000	10	25	TO-220AB	2	
D20LC20UB4	200	2X10	150	10	0.1	1.000	10	25	TO-3PF	2	
D20LC20UA6	200	2X10	150	10	0.1	1.000	10	25	TO-263	2	
HUR3020PT	200	2X15	220	20	0.2	1.000	15	25	TO-247AD	2	TO-220F-3L
HUR4020PT	200	2X20	250	20	0.2	1.000	20	25	TO-247AD	2	
HUR5020PT	200	2X25	300	20	0.2	1.000	25	25	TO-247AD	2	
HUR6020PT	200	2X30	360	30	0.3	1.000	30	25	TO-247AD	2	
HUR7020PT	200	2X35	400	30	0.3	1.000	35	25	TO-247AD	2	TO-247AC
HUR8020PT	200	2X40	480	30	0.3	1.000	40	25	TO-247AD	2	
HUR1040	400	10	105	10	0.1	1.300	10	35	TO-220AC	1	
HUR1540	400	15	160	10	0.1	1.300	15	35	TO-220AC	1	
HUR2040	400	20	210	20	0.2	1.300	20	35	TO-220AC	1	
HUR3040	400	30	320	30	0.3	1.300	30	35	TO-247AC	1	TO-247AD
HUR4040	400	40	420	30	0.3	1.300	40	35	TO-247AC	1	
HUR6040	400	60	630	50	0.5	1.300	60	35	TO-247AC	1	
HUR8040	400	80	840	60	0.6	1.300	80	35	TO-247AC	1	
HUR10040	400	100	950	70	0.7	1.300	100	35	TO-247AC	1	
HUR2040CTA1	400	2X10	105	10	0.1	1.300	10	35	TO-220F-3L	2	TO-264
HUR2040CTA2	400	2X10	105	10	0.1	1.300	10	35	TO-220AB	2	
HUR3040PT	400	2X15	160	10	0.1	1.300	15	35	TO-247AD	2	
HUR4040PT	400	2X20	210	20	0.2	1.300	20	35	TO-247AD	2	
HUR6040PT	400	2X30	320	30	0.3	1.300	30	35	TO-247AD	2	
HUR8040PT	400	2X40	420	30	0.3	1.300	40	35	TO-247AD	2	
HUR12040PT	400	2X60	630	50	0.5	1.300	60	35	TO-264	2	
HUR1560	600	15	140	10	0.1	1.550	15	40	TO-220AC	1	
HUR1560F	600	15	140	10	0.1	1.550	15	40	TO-220F-2L	1	
HUR2060	600	20	190	20	0.2	1.550	20	40	TO-220AC	1	内部电路Circuit
HUR3060	600	30	285	30	0.3	1.550	30	40	TO-247AC	1	
HUR4060	600	40	380	30	0.3	1.550	40	40	TO-247AC	1	
HUR6060	600	60	570	50	0.5	1.550	60	40	TO-247AC	1	
HUR7560	600	75	710	60	0.6	1.550	75	40	TO-247AC	1	Circuit 1
HUR10060	600	100	950	70	0.7	1.550	100	40	TO-247AC	1	
HUR12060	600	120	1140	80	0.8	1.550	120	40	TO-247AC	1	
HUR15060	600	150	1425	100	1	1.550	150	40	TO-247AC	1	
HUR2060CTA1	600	2X10	95	10	0.1	1.550	10	40	TO-220F-3L	2	
HUR2060CTA2	600	2X10	95	10	0.1	1.550	10	40	TO-220AB	2	Circuit 2
HUR3060PT	600	2X15	140	10	0.1	1.550	15	40	TO-247AD	2	
HUR4060PT	600	2X20	190	20	0.2	1.550	20	40	TO-247AD	2	

© 2023 ETATRONIC All rights reserved

Tel: +86-519-86800000 Fax: +86-519-83888666 E-mail: sales@etatronic.com www.etatronic.com

型号 TYPE	电气特性Electrical Characteristics								封装外形 Package Style	内部电路 Circuits	外形图 Outlines
	V_{RRM}	I_{FAV}	I_{FSM}	I_{RRM} at $V_R=V_{RRM}$		V_{Fmax} at I_{FM}		trr (typ)			
				25°C	125°C						
	V	A	A	μA	mA	V	A	ns			
HUR6060PT	600	2X30	285	30	0.3	1.550	30	40	TO-247AD	2	TO-220F-2L
HUR8060PT	600	2X40	380	30	0.3	1.550	40	40	TO-247AD	2	
HUR12060PT	600	2X60	570	50	0.5	1.550	60	40	TO-264	2	
HUR15120	1200	15	120	10	0.1	2.000	15	50	TO-220AC	1	
HUR15120F	1200	15	120	10	0.1	2.000	15	50	TO-220F-2L	1	TO-220AC
HUR20120	1200	20	160	20	0.2	2.000	20	50	TO-220AC	1	
HUR20120F	1200	20	160	20	0.2	2.000	20	50	TO-220F-2L	1	
HUR30120	1200	30	240	30	0.3	2.000	30	50	TO-247AC	1	
HUR40120	1200	40	320	30	0.3	2.000	40	50	TO-247AC	1	
HUR606120	1200	60	480	50	0.5	2.000	60	50	TO-247AC	1	TO-220AB
HUR75120	1200	75	600	60	0.6	2.000	75	50	TO-247AC	1	
HUR100120	1200	100	800	70	0.7	2.000	100	50	TO-247AC	1	
HUR120120	1200	120	960	80	0.8	2.000	120	50	TO-247AC	1	
HUR150120	1200	150	1200	100	1	2.000	150	50	TO-247AC	1	
HUR20120CTA1	1200	2X10	80	10	0.1	2.000	10	50	TO-220F-3L	2	TO-220F-3L
HUR20120CTA2	1200	2X10	80	10	0.1	2.000	10	50	TO-220AB	2	
HUR30120PT	1200	2X15	120	10	0.1	2.000	15	50	TO-247AD	2	
HUR40120PT	1200	2X20	160	20	0.2	2.000	20	50	TO-247AD	2	
HUR60120PT	1200	2X30	240	30	0.3	2.000	30	50	TO-247AD	2	TO-247AC
HUR80120PT	1200	2X40	320	30	0.3	2.000	40	50	TO-247AD	2	
HUR120120PT	1200	2X60	480	50	0.5	2.000	60	50	TO-264	2	
HUR150120PT	1200	2X75	600	60	0.6	2.000	75	50	TO-264	2	
HUR2×30-20	200	2×30	360	250	1	1.10	30	25	SOT-227	3	
HUR2×30-30	300	2×30	300	250	1	1.15	30	30	SOT-227	3	TO-247AD
HUR2×30-40	400	2×30	300	250	1	1.30	30	35	SOT-227	3	
HUR2×30-60	600	2×30	250	250	1	1.55	30	40	SOT-227	3	
HUR2×30-120	1200	2×30	200	250	1	2.00	30	50	SOT-227	3	
HUR2×60-20	200	2×60	600	650	2.5	1.10	60	25	SOT-227	3	
HUR2×60-30	300	2×60	600	650	2.5	1.15	60	30	SOT-227	3	TO-264
HUR2×60-40	400	2×60	600	650	2.5	1.30	60	35	SOT-227	3	
HUR2×60-60	600	2×60	600	650	2.5	1.55	60	40	SOT-227	3	
HUR2×60-120	1200	2×60	500	1000	4	2.00	60	50	SOT-227	3	
HUR2×100-40	400	2×100	1000	1000	4	1.45	100	35	SOT-227	3	
HUR2×100-60	600	2×100	1000	1000	4	1.54	100	40	SOT-227	3	
HUR2×100-120	1200	2×100	950	1000	5	2.00	100	50	SOT-227	3	SOT-227
HUR2×120-20	200	2×120	1100	1000	4	1.15	100	30	SOT-227	3	
HUR2×120-40	400	2×120	1050	1000	4	1.35	100	35	SOT-227	3	
HUR2×140-20	200	2×140	1000	1000	4	1.15	100	30	SOT-227	3	
HUR2×140-40	400	2×140	1000	1000	4	1.50	100	35	SOT-227	3	

内部电路 Circuits

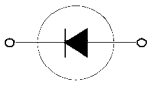

Circuit 1

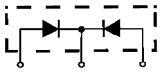

Circuit 2

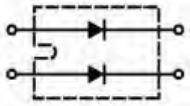

Circuit 3

© 2023 ETATRONIC All rights reserved

Tel: +86-519-86800000 Fax: +86-519-83888666 E-mail: sales@etatronic.com www.etatronic.com

软恢复特性超快恢复外延二极管模块

Soft Recovery Behaviour Ultra Fast Recovery Epitaxial Diode Modules

Tj = -40°C ~ +125°C, Tjm = +125°C

E310749

型号 TYPE	电气特性Electrical Characteristics								封装外形 Package Style	内部电路 Circuits	外形图 Outlines
	V_{RRM}	I_{FAV}	I_{FSM}	I_{RRM} at $V_R=V_{RRM}$ 25°C	I_{RRM} at $V_R=V_{RRM}$ 125°C	V_{Fmax} at I_{FM}		trr (typ)			
	V	A	A	μA	mA	V	A	ns			
S1PDBF26N06E1	600	26	110	100	0.50	1.60	15	35	E1	4	
S1PDBF55N12E1	1200	55	200	250	1.00	2.00	30	50	E1	4	
S1PDBF100N12E2	1200	100	500	1000	2.50	2.00	50	50	E2	5	
S3PDBF56N06E1	600	56	110	100	0.50	1.60	20	35	E1	4	
S3PDBF75N12E1	1200	75	200	250	1.00	2.00	30	50	E1	4	
SDKF2X60-17B1	1700	2X60	1000	400	4.00	2.50	60	150	Fig.2	6	
SDKF2X60-17B2	1700	2X60	1000	400	4.00	2.50	60	150	Fig.2	7	
SDAF2X60-17B1	1700	2X60	1000	400	4.00	2.50	60	150	Fig.2	8	
SDAF2X60-17B2	1700	2X60	1000	400	4.00	2.50	60	150	Fig.2	9	
SDEF2X60-17B1	1700	2X60	1000	400	4.00	2.50	60	150	Fig.2	10	
SDEF2X60-17B2	1700	2X60	1000	400	4.00	2.50	60	150	Fig.2	11	
SDFF2X60-17B1	1700	2X60	1000	400	4.00	2.50	60	150	Fig.2	12	
SDFF2X60-17B2	1700	2X60	1000	400	4.00	2.50	60	150	Fig.2	13	
SDKF2×75-12B1	1200	2×75	1200	500	10.00	2.17	75	60	Fig.2	6	
SDKF2×75-12B2	1200	2×75	1200	500	10.00	2.17	75	60	Fig.2	7	
SDAF2×75-12B1	1200	2×75	1200	500	10.00	2.17	75	60	Fig.2	8	
SDAF2×75-12B2	1200	2×75	1200	500	10.00	2.17	75	60	Fig.2	9	
SDEF2×75-12B1	1200	2×75	1200	500	10.00	2.17	75	60	Fig.2	10	
SDEF2×75-12B2	1200	2×75	1200	500	10.00	2.17	75	60	Fig.2	11	
SDFF2×75-12B1	1200	2×75	1200	500	10.00	2.17	75	60	Fig.2	12	
SDFF2×75-12B2	1200	2×75	1200	500	10.00	2.17	75	60	Fig.2	13	
SDKF2×100-04B1	400	2×100	2000	500	10.00	1.30	100	50	Fig.2	6	
SDKF2×100-04B2	400	2×100	2000	500	10.00	1.30	100	50	Fig.2	7	
SDAF2×100-04B1	400	2×100	2000	500	10.00	1.30	100	50	Fig.2	8	
SDAF2×100-04B2	400	2×100	2000	500	10.00	1.30	100	50	Fig.2	9	
SDEF2×100-04B1	400	2×100	2000	500	10.00	1.30	100	50	Fig.2	10	
SDEF2×100-04B2	400	2×100	2000	500	10.00	1.30	100	50	Fig.2	11	
SDFF2×100-04B1	400	2×100	2000	500	10.00	1.30	100	50	Fig.2	12	
SDFF2×100-04B2	400	2×100	2000	500	10.00	1.30	100	50	Fig.2	13	
SDKF2×100-06B1	600	2×100	2000	500	10.00	1.35	100	50	Fig.2	6	
SDKF2×100-06B2	600	2×100	2000	500	10.00	1.35	100	50	Fig.2	7	
SDAF2×100-06B1	600	2×100	2000	500	10.00	1.35	100	50	Fig.2	8	
SDAF2×100-06B2	600	2×100	2000	500	10.00	1.35	100	50	Fig.2	9	
SDEF2×100-06B1	600	2×100	2000	500	10.00	1.35	100	50	Fig.2	10	
SDEF2×100-06B2	600	2×100	2000	500	10.00	1.35	100	50	Fig.2	11	
SDFF2×100-06B1	600	2×100	2000	500	10.00	1.35	100	50	Fig.2	12	
SDFF2×100-06B2	600	2×100	2000	500	10.00	1.35	100	50	Fig.2	13	
SDAF2X100-07D5	700	2X100	2000	500	10.00	1.60	100	50	Fig.60	9	
SDKF2X100-07D5	700	2X100	2000	500	10.00	1.60	100	50	Fig.60	7	
SDKF2×100-12B1	1200	2×100	2500	500	15.00	2.00	100	60	Fig.2	6	
SDKF2×100-12B2	1200	2×100	2500	500	15.00	2.00	100	60	Fig.2	7	
SDAF2×100-12B1	1200	2×100	2500	500	15.00	2.00	100	60	Fig.2	8	
SDAF2×100-12B2	1200	2×100	2500	500	15.00	2.00	100	60	Fig.2	9	
SDEF2×100-12B1	1200	2×100	2500	500	15.00	2.00	100	60	Fig.2	10	
SDEF2×100-12B2	1200	2×100	2500	500	15.00	2.00	100	60	Fig.2	11	
SDFF2×100-12B1	1200	2×100	2500	500	15.00	2.00	100	60	Fig.2	12	
SDFF2×100-12B2	1200	2×100	2500	500	15.00	2.00	100	60	Fig.2	13	
SDKF2×150-04B1	400	2×150	3040	600	18.00	1.55	150	50	Fig.3	6	
SDKF2×150-04B2	400	2×150	3040	600	18.00	1.55	150	50	Fig.3	7	

E1

E2

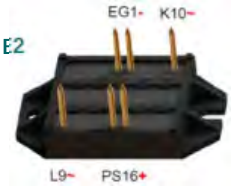

Fig.2

Fig.60 (D5)

Circuit 4

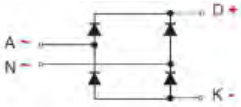

Circuit 5

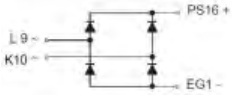

Circuit 6 (SDKF-B1)

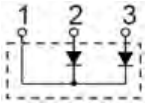

Circuit 7 (SDKF-B2)

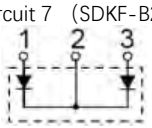

Circuit 8 (SDAF-B1)

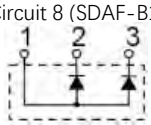

© 2023 ETATRONIC All rights reserved

Tel: +86-519-86800000 Fax: +86-519-83888666 E-mail: sales@etatronic.com www.etatronic.com

型号 TYPE	电气特性Electrical Characteristics								封装外形 Package Style	内部电路 Circuits	外形图 Outlines
	V_{RRM}	I_{FAV}	I_{FSM}	I_{RRM} at $V_R=V_{RRM}$		V_{Fmax} at I_{FM}		trr (typ)			
				25°C	125°C						
	V	A	A	μA	mA	V	A	ns			
SDAF2×150-04B1	400	2×150	3040	600	18.00	1.55	150	50	Fig.3	8	
SDAF2×150-04B2	400	2×150	3040	600	18.00	1.55	150	50	Fig.3	9	
SDEF2×150-04B1	400	2×150	3040	600	18.00	1.55	150	50	Fig.3	10	
SDEF2×150-04B2	400	2×150	3040	600	18.00	1.55	150	50	Fig.3	11	
SDFF2×150-04B1	400	2×150	3040	600	18.00	1.55	150	50	Fig.3	12	
SDFF2×150-04B2	400	2×150	3040	600	18.00	1.55	150	50	Fig.3	13	
SDKF2×150-06B1	600	2×150	3040	600	18.00	1.55	150	50	Fig.3	6	
SDKF2×150-06B2	600	2×150	3040	600	18.00	1.55	150	50	Fig.3	7	
SDAF2×150-06B1	600	2×150	3040	600	18.00	1.55	150	50	Fig.3	8	
SDAF2×150-06B2	600	2×150	3040	600	18.00	1.55	150	50	Fig.3	9	
SDEF2×150-06B1	600	2×150	3040	600	18.00	1.55	150	50	Fig.3	10	
SDEF2×150-06B2	600	2×150	3040	600	18.00	1.55	150	50	Fig.3	11	
SDFF2×150-06B1	600	2×150	3040	600	18.00	1.55	150	50	Fig.3	12	
SDFF2×150-06B2	600	2×150	3040	600	18.00	1.55	150	50	Fig.3	13	
SDKF2×200-04B1	400	2×200	3300	600	18.00	1.55	200	50	Fig.3	6	
SDKF2×200-04B2	400	2×200	3300	600	18.00	1.55	200	50	Fig.3	7	
SDAF2×200-04B1	400	2×200	3300	600	18.00	1.55	200	50	Fig.3	8	
SDAF2×200-04B2	400	2×200	3300	600	18.00	1.55	200	50	Fig.3	9	
SDEF2×200-04B1	400	2×200	3300	600	18.00	1.55	200	50	Fig.3	10	
SDEF2×200-04B2	400	2×200	3300	600	18.00	1.55	200	50	Fig.3	11	
SDFF2×200-04B1	400	2×200	3300	600	18.00	1.55	200	50	Fig.3	12	
SDFF2×200-04B2	400	2×200	3300	600	18.00	1.55	200	50	Fig.3	13	
SDKF2×200-06B1	600	2×200	3300	600	18.00	1.55	200	50	Fig.3	6	
SDKF2×200-06B2	600	2×200	3300	600	18.00	1.55	200	50	Fig.3	7	
SDAF2×200-06B1	600	2×200	2100	600	18.00	1.55	200	50	Fig.3	8	
SDAF2×200-06B2	600	2×200	3300	600	18.00	1.55	200	50	Fig.3	9	
SDEF2×200-06B1	600	2×200	3300	600	18.00	1.55	200	50	Fig.3	10	
SDEF2×200-06B2	600	2×200	3300	600	18.00	1.55	200	50	Fig.3	11	
SDFF2×200-06B1	600	2×200	3300	600	18.00	1.55	200	50	Fig.3	12	
SDFF2×200-06B2	600	2×200	3300	600	18.00	1.55	200	50	Fig.3	13	
SDKF2×200-12B1	1200	2×200	3300	600	18.00	1.55	200	50	Fig.3	6	
SDKF2×200-12B2	1200	2×200	3300	600	18.00	1.55	200	50	Fig.3	7	
SDAF2×200-12B1	1200	2×200	3300	600	18.00	1.55	200	50	Fig.3	8	
SDAF2×200-12B2	1200	2×200	3300	600	18	1.55	200	50	Fig.3	9	
SDEF2×200-12B1	1200	2×200	3300	600	18	1.55	200	50	Fig.3	10	
SDEF2×200-12B2	1200	2×200	3300	600	18	1.55	200	50	Fig.3	11	
SDFF2×200-12B1	1200	2×200	3300	600	18	1.55	200	50	Fig.3	12	
SDFF2×200-12B2	1200	2×200	3300	600	18	1.55	200	50	Fig.3	13	
SDEF2X250-12DA	1200	2X250	3800	700	18	2.00	250	50	Fig.34	14	
SDKF2×300-06B1	600	2×300	4400	800	20	1.55	300	50	Fig.3	6	
SDKF2×300-06B2	600	2×300	4400	800	20	1.55	300	50	Fig.3	7	
SDAF2×300-06B1	600	2×300	4400	800	20	1.55	300	50	Fig.3	8	
SDAF2×300-06B2	600	2×300	4400	800	20	1.55	300	50	Fig.3	9	
SDEF2×300-06B1	600	2×300	4400	800	20	1.55	300	50	Fig.3	10	
SDEF2×300-06B2	600	2×300	4400	800	20	1.55	300	50	Fig.3	11	
SDFF2×300-06B1	600	2×300	4400	800	20	1.55	300	50	Fig.3	12	
SDFF2×300-06B2	600	2×300	4400	800	20	1.55	300	50	Fig.3	13	
SDKF2×350-02B1	200	2×350	5400	1000	30	1.20	350	35	Fig.3	6	
SDKF2×350-02B2	200	2×350	5400	1000	30	1.20	350	35	Fig.3	7	
SDF120-17B	1700	120	2000	6000	80	2.20	120	90	Fig.4	15	
SDF200-12B	1200	200	2550	3000	10	1.80	200	50	Fig.4	15	
SDF200-17B	1700	200	2200	3200	15	2.20	200	90	Fig.4	15	

Fig.3

Fig.34

Fig.4

Circuit 9 （SDAF-B2)

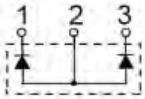

Circuit 10 (SDEF-B1)

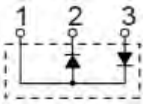

Circuit 11 (SDEF-B2)

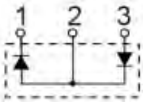

Circuit 12 （SDFF-B1)

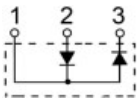

Circuit 13(SDFF-B2)

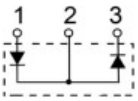

Circuit 14 (SDEF-DA)

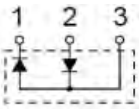

Circuit 15 (SDF-B)

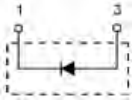

© 2023 ETATRONIC All rights reserved

Tel: +86-519-86800000 Fax: +86-519-83888666 E-mail: sales@etatronic.com www.etatronic.com

型号 TYPE	电气特性Electrical Characteristics								封装外形 Package Style	内部电路 Circuits	外形图 Outlines
	V_{RRM}	I_{FAV}	I_{FSM}	I_{RRM} at $V_R=V_{RRM}$		V_{Fmax} at I_{FM}		trr (typ)			
				25°C	125°C						
	V	A	A	μA	mA	V	A	ns			
SDF300-05D4	500	300	4100	500	30	1.10	300	85	Fig.53 **(D4)**	16	Fig.53 (D4)
SDF300-06D4	600	300	4000	500	30	1.30	300	75	Fig.53 **(D4)**	16	
SDF300-07D4	700	300	4000	500	30	1.50	300	75	Fig.53 **(D4)**	16	
SDF450-12	1200	453	4800	2000	50	2.00	450	60	Fig.4	15	
SDF500-06	600	514	5280	1500	50	1.60	500	50	Fig.4	15	
SDF550-02	200	550	5580	1500	50	1.25	550	35	Fig.4	15	
SUR150-02NB	200	150	1800	100	20	1.10	150	35	Fig.42	17	
SUR150-04NB	400	150	1700	100	20	1.30	150	50	Fig.42	17	Fig.4
SUR150-06NB	600	150	1600	100	20	1.50	150	50	Fig.42	17	
SUR250-02NB	200	250	2600	150	20	1.10	250	35	Fig.42	17	
SUR250-04NB	400	250	2500	150	20	1.30	250	50	Fig.42	17	
SUR250-06NB	600	250	2400	150	20	1.50	250	50	Fig.42	17	
SUR300-02NB	200	300	3200	200	20	1.10	300	35	Fig.42	17	
SUR300-04NB	400	300	3100	200	20	1.30	300	50	Fig.42	17	Fig.42
SUR300-06NB	600	300	3000	200	20	1.50	300	50	Fig.42	17	
SUR400-02NB	200	400	4900	300	20	1.10	400	35	Fig.42	17	
SUR400-04NB	400	400	4800	300	20	1.30	400	40	Fig.42	17	
SUR400-06NB	600	400	4700	300	20	1.50	400	50	Fig.42	17	
SRUD20020CT	200	2x100	1000	50	5	1.10	100	35	Fig.45	18	
SRUD20040CT	400	2x100	900	50	5	1.30	100	40	Fig.45	18	Fig.45
SRUD20060CT	600	2x100	800	50	5	1.50	100	50	Fig.45	18	
SRUD20020CTD2	200	2x100	1000	50	5	1.10	100	35	Fig.44 **(D2)**	19	
SRUD20040CTD2	400	2x100	900	50	5	1.30	100	40	Fig.44 **(D2)**	19	
SRUD20060CTD2	600	2x100	800	50	5	1.50	100	50	Fig.44 **(D2)**	19	
SRUD30020CT	200	2x150	1400	100	6	1.10	150	35	Fig.45	18	
SRUD30040CT	400	2x150	1300	100	6	1.30	150	40	Fig.45	18	Fig. 44 (D2)
SRUD30060CT	600	2x150	1200	100	6	1.50	150	50	Fig.45	18	
SRUD30020CTD3	200	2x150	1400	100	6	1.10	150	35	Fig.52 **(D3)**	19	
SRUD30040CTD3	400	2x150	1300	100	6	1.30	150	40	Fig.52 **(D3)**	19	
SRUD30060CTD3	600	2x150	1200	100	6	1.50	150	50	Fig.52 **(D3)**	19	
SRUD40020CT	200	2x200	1800	200	8	1.10	200	35	Fig.45	18	
SRUD40040CT	400	2x200	1700	200	8	1.30	200	40	Fig.45	18	Fig.52 (D3)
SRUD40060CT	600	2x200	1600	200	8	1.50	200	50	Fig.45	18	
SRUD40020CTD3	200	2x200	1800	200	8	1.10	200	35	Fig.52 **(D3)**	19	
SRUD40040CTD3	400	2x200	1700	200	8	1.30	200	40	Fig.52 **(D3)**	19	
SRUD40060CTD3	600	2x200	1600	200	8	1.50	200	50	Fig.52 **(D3)**	19	

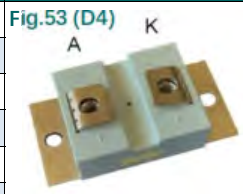

内部电路 Circuits

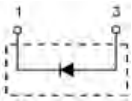

Circuit 15 (SDF-B)

Circuit 16 (SDF-D4)

Circuit 17 (SUR-NB)

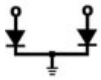

Circuit 18 (SRUD*****CT)

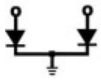

Circuit 19 (SRUD*****CTD2 / D3)

© 2023 ETATRONIC All rights reserved

Tel: +86-519-86800000 Fax: +86-519-83888666 E-mail: sales@etatronic.com www.etatronic.com

功率晶体三极管
Power Transistors

型号 Part Number	电气特性Electrical Characteristics							内部电路 Circuits	封装外形 Package Style	外形图 Outlines
	极性 TYPE	BV_{CBO}	BV_{CEO}	BV_{EBO}	I_C @Tc=90℃	V_{CEsat} @25°C typ.	HFE 25°C typ.			
		V	V	V	A	V				
2SC5171A1	NPN	180	180	5	2.0	0.24	100~320	1	TO-220F	
2SC5171A2	NPN	180	180	5	2.0	0.24	100~320	1	TO-220AB	
2SC5171A6	NPN	180	180	5	2.0	0.24	100~320	1	TO-263	
2SA1930A1	PNP	-180	-180	-5	-2.0	-0.24	100~320	2	TO-220F	
2SA1930A2	PNP	-180	-180	-5	-2.0	-0.24	100~320	2	TO-220AB	
2SA1930A6	PNP	-180	-180	-5	-2.0	-0.24	100~320	2	TO-263	
2SA1931A1	PNP	-60	-50	-7	-5.0	-0.20	100~300	2	TO-220F	
2SA1931A2	PNP	-60	-50	-7	-5.0	-0.20	100~300	2	TO-220AB	
2SA1931A6	PNP	-60	-50	-7	-5.0	-0.20	100~300	2	TO-263	
2SD1816A3	NPN	120	100	6	4.0	0.20	70~400	1	TO-251	
2SD1816A4	NPN	120	100	6	4.0	0.20	70~400	1	TO-252	
2SB1216A3	PNP	-120	-100	-6	-4.0	-0.20	70~400	2	TO-251	
2SB1216A4	PNP	-120	-100	-6	-4.0	-0.20	70~400	2	TO-252	
2SC3518A3	NPN	60	60	7	5.0	0.18	100~400	1	TO-251	
2SC3518A4	NPN	60	60	7	5.0	0.18	100~400	1	TO-252	
2SA1385A3	PNP	-60	-60	-7	-5.0	-0.18	100~400	2	TO-251	
2SA1385A4	PNP	-60	-60	-7	-5.0	-0.18	100~400	2	TO-252	
KSC2334A2	NPN	150	100	7	7.0	0.60	>40	1	TO-220AB	
MMUN2211LT1	Digital Transistor	50	50	6	0.1	0.25	>35	4	SOT-23-3L	
TIP112A1	NPN Darlington	100	100	5	4.0	2.00	1000~10000	3	TO-220F	
TIP112A2	NPN Darlington	100	100	5	4.0	2.00	1000~10000	3	TO-220AB	
TIP112A6	NPN Darlington	100	100	5	4.0	2.00	1000~10000	3	TO-263	
TIP122A1	NPN Darlington	100	100	5	5.0	2.00	1000~10000	3	TO-220F	
TIP122A2	NPN Darlington	100	100	5	5.0	2.00	1000~10000	3	TO-220AB	
TIP122A6	NPN Darlington	100	100	5	5.0	2.00	1000~10000	3	TO-263	
TTD1415A1	NPN Darlington	120	100	6	7.0	2.00	2000~15000	3	TO-220F	
TIP132A1	NPN Darlington	100	100	5	8.0	2.00	1000~10000	3	TO-220F	
TIP132A2	NPN Darlington	100	100	5	8.0	2.00	1000~10000	3	TO-220AB	
TIP132A6	NPN Darlington	100	100	5	8.0	2.00	1000~10000	3	TO-263	
TIP142B2	NPN Darlington	100	100	6	10.0	2.10	1000~15000	3	TO-247AD	
2SC5196B2	NPN	120	120	6	6.0	1.00	55~160	1	TO-247AD	
2SA1939B2	PNP	-120	-120	-6	-6.0	-1.00	55~160	2	TO-247AD	
2SD718B2	NPN	120	120	6	8.0	1.50	55~160	1	TO-247AD	
2SB688B2	PNP	-120	-120	-6	-8.0	-1.50	55~160	2	TO-247AD	
2SC3320B2	NPN	500	400	7	15.0	0.70	>10	1	TO-247AD	
2SC5200B3	NPN	250	250	5	17.0	0.40	55~160	1	TO-264	
2SA1943B3	PNP	-250	-250	-5	-17.0	-0.40	55~160	2	TO-264	
MJL4281B3	NPN	350	350	5	15.0	0.70	80~250	1	TO-264	
MJL4302B3	PNP	-350	-350	-5	-15.0	-0.70	80~250	2	TO-264	

TO-220F

TO-220AB

TO-263

TO-251

TO-252

SOT-23-3L

TO-247AD

TO-264

内部电路Circuit

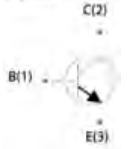

Circuit 1 (NPN)

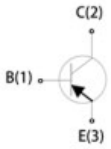

Circuit 2（PNP）

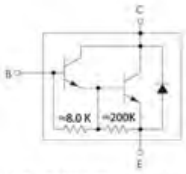

Circuit 3 NPN Darlington

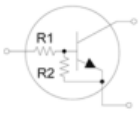

Circuit 4 Digital Transistor

© 2023 ETATRONIC All rights reserved
Tel: +86-519-86800000 Fax: +86-519-83888666 E-mail: sales@etatronic.com www.etatronic.com

晶闸管(可控硅)分立器件
Thyristor Discretes

型号 TYPE	电气特性Electrical Characteristics												封装外形 Package Style	外形图 Outlines
	V_{DRM}	I_T		I_{GT}	V_{GT}	I_{DRM}	V_{TM}	I_H	I^2T	I_{TSM}	dv/dt	R_{thJC}		
	V_{RRM}	I_{TRMS}	I_{TVM}			I_{RRM}								
	V	A	A	mA	V	mA	V	mA	A^2S	A	V/μs	°C/W		
STO608SF	600	8	5.0	20~30uA (高灵敏型 Sensitive)	0.80	0.01	1.40	5	50	80	20	4.00	TO-220F 绝缘式 (Isolated)	TO-220F 全包封绝缘式 (Isolated)
STO808SF	800													
STO1008SF	1000													
STO1208SF	1200													
STYN612	600	12	8.0	2~15	0.85	0.01	1.60	30	98	140	200	1.30	TO-220AB 不绝缘式 (Non-Isolated)	
STYN812	800													
STYN1012	1000													
STYN1212	1200													
STYN616	600	16	10.0	2~25	0.85	0.01	1.60	40	180	190	500	1.10	TO-220AB 不绝缘式 (Non-Isolated)	TO-220AB 不绝缘式 (Non-Isolated)
STYN816	800													
STYN1016	1000													
STYN1216	1200													
STYN625	600	25	16.0	4~40	0.85	0.01	1.60	50	450	220	1000	1.00	TO-220AB 不绝缘式 (Non-Isolated)	
STYN825	800													
STYN1025	1000													
STYN1225	1200													
STO630F	600	30	19.0	25~50	0.85	0.02	1.50	50	500	250	1000	0.98	TO-220F 绝缘式 (Isolated)	
STO830F	800													
STO1230F	1200													
STO1630F	1600													
STO1830F	1800													
STYN630	600	30	19.0	25~50	0.85	0.02	1.50	50	500	250	1000	0.95	TO-247AD 不绝缘式 (Non-Isolated)	TO-247AD 不绝缘式 (Non-Isolated)
STYN830	800													
STYN1230	1200													
STYN1630	1600													
STYN1830	1800													
STYN655	600	55	32.0	8~80	0.85	0.10	1.50	100	750	350	1000	0.90	TO-247AD 不绝缘式 (Non-Isolated)	
STYN855	800													
STYN1255	1200													
STYN1455	1400													
STYN1655	1600													
STYN1855	1800													
STYN2055	2000													
STO855	800	55	32.0	8~80	0.85	0.10	1.50	100	750	350	1000	0.90	TO-218 绝缘式 (Isolated)	TO-247P 不绝缘式 (Non-Isolated)
STO1055	1000													
STO1255	1200													
STO1455	1400													
STO1655	1600													
STO1855	1800													
STYN865	800	65	41.0	50~100	0.85	0.50	1.64	100	1060	450	1000	0.75	TO-247AD 不绝缘式 (Non-Isolated)	TO-264 不绝缘式 (Non-Isolated)
STYN1265	1200													
STYN1465	1400													
STYN1665	1600													
STYN1865	1800													
STYN2065	2000													
STO865	800	65	41.0	50~100	0.85	0.50	1.64	100	1060	450	1000	0.75	TO-218 绝缘式 (Isolated)	
STO1265	1200													
STO1465	1400													
STO1665	1600													
STO1865	1800													
STO2065	2000													

© 2023 ETATRONIC All rights reserved
Tel: +86-519-86800000 Fax: +86-519-83888666 E-mail: sales@etatronic.com www.etatronic.com

型号 TYPE	电气特性Electrical Characteristics												封装外形 Package Style	外形图 Outlines
	V_{DRM}	I_T		I_{GT}	V_{GT}	I_{DRM}	V_{TM}	I_H	I^2T	I_{TSM}	dv/dt	R_{thJC}		
	V_{RRM}	I_{TRMS}	I_{TVM}			I_{RRM}								
	V	A	A	mA	V	mA	V	mA	A^2S	A	V/μs	°C/W		
STYN875	800	75	48.0	50~100	0.85	0.50	1.64	100	2500	550	1000	0.70	TO-247AD 不绝缘式 (Non-Isolated)	TO-247AD 不绝缘式 (Non-Isolated)
STYN1275	1200													
STYN1475	1400													
STYN1675	1600													
STYN1875	1800													
STYN2075	2000													
STO875	800	75	48.0	50~100	0.85	0.50	1.64	100	2500	550	1000	0.70	TO-218 绝缘式 (Isolated)	TO-218 (绝缘式Isolated)
STO1275	1200													
STO1475	1400													
STO1675	1600													
STO1875	1800													
STO2075	2000													
STYN8110	800	110	70	50~100	0.85	0.50	1.50	60	5400	800	1000	0.50	TO-247P 不绝缘式 (Non-Isolated)	TO-247P 不绝缘式 (Non-Isolated)
STYN12110	1200													
STYN16110	1600													
STYN18110	1800													
STYN20110	2000													
STYN22110	2200													
STYN8140	800	140	90	50~100	0.85	0.50	1.50	100	7500	1000	1000	0.40	TO-247P 不绝缘式 (Non-Isolated)	
STYN12140	1200													
STYN16140	1600													
STYN18140	1800													
STYN20140	2000													
STYN22140	2200													
STYN8150	800	150	95	50~100	0.85	0.50	1.50	100	7500	1000	1000	0.35	TO-264 不绝缘式 (Non-Isolated)	TO-264 不绝缘式 (Non-Isolated)
STYN12150	1200													
STYN16150	1600													
STYN18150	1800													
STYN20150	2000													
STYN22150	2200													
STO50GK08S	800	79	50	50~100	0.85	0.50	1.64	100	2740	750	1000	0.72	SOT-227 绝缘式 (Isolated)	SOT-227 (绝缘式Isolated)
STO50GK10S	1000													
STO50GK12S	1200													
STO50GK14S	1400													
STO50GK16S	1600													
STO50GK18S	1800													
STO75GK08S	800	118	75	50~100	0.85	0.50	1.64	100	5700	1100	1000	0.45	SOT-227 绝缘式 (Isolated)	
STO75GK10S	1000													
STO75GK12S	1200													
STO75GK16S	1600													
STO75GK18S	1800													
STO100GK08S	800	157	100	50~100	0.85	0.50	1.64	100	9800	1400	1000	0.35	SOT-227 绝缘式 (Isolated)	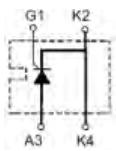
STO100GK10S	1000													
STO100GK12S	1200													
STO100GK14S	1400													
STO100GK16S	1600													
STO100GK18S	1800													
STO150GK08S	800	236	150	50~100	0.85	0.50	1.64	100	20000	2000	1000	0.20	SOT-227 绝缘式 (Isolated)	E310749
STO150GK10S	1000													
STO150GK12S	1200													
STO150GK14S	1400													
STO150GK16S	1600													
STO150GK18S	1800													

© 2023 ETATRONIC All rights reserved
Tel: +86-519-86800000 Fax: +86-519-83888666 E-mail: sales@etatronic.com www.etatronic.com

晶闸管-晶闸管模块
Thyristor-Thyristor Modules(Isolated)

型号 TYPE	电气特性Electrical Characteristics										封装外形 Package Style	外形图 Outlines
	IT			V_{DRM}	I_{TSM}	V_{TO}	r_T	dv/dt	T_{VJM}	R_{thJC}		
	I_{TRMS}	I_{TVM}	@T_C	/ V_{RRM}								
	A	A	°C	V	A	V	mΩ	V/μs	°C	K/W		
STT27GK08	42	27	85	800	520	0.85	11.00	1000	125	0.440	Fig.31	Fig.31
STT27GK12				1200								
STT27GK14				1400								
STT27GK16				1600								
STT27GK18				1800								
STT27GK08B	42	27	85	800	520	0.85	11.00	1000	125	0.540	Fig.12	STT
STT27GK12B				1200								
STT27GK14B				1400								
STT27GK16B				1600								
STT27GK18B				1800								
STT49GK08	76	49	85	800	1150	0.85	5.30	1000	125	0.265	Fig.31	Fig.12
STT49GK12				1200								
STT49GK14				1400								
STT49GK16				1600								
STT49GK18				1800								
STT49GK08B	76	49	85	800	1150	0.85	5.30	1000	125	0.365	Fig.12	STT***B
STT49GK12B				1200								
STT49GK14B				1400								
STT49GK16B				1600								
STT49GK18B				1800								
STT60GK08	94	60	85	800	1500	0.85	3.70	1000	125	0.225	Fig.31	
STT60GK12				1200								
STT60GK14				1400								
STT60GK16				1600								
STT60GK18				1800								
STT60GK08B	94	60	85	800	1500	0.85	3.70	1000	125	0.325	Fig.12	其它内部连接电路 Circuit
STT60GK12B				1200								STA
STT60GK14B				1400								
STT60GK16B				1600								
STT60GK18B				1800								
STT70GK08	110	70	85	800	1600	0.85	3.20	1000	125	0.200	Fig.31	STK
STT70GK12				1200								
STT70GK14				1400								
STT70GK16				1600								
STT70GK18				1800								
STT70GK20				2000								
STT70GK22				2200								
STT70GK24				2400								STA***B
STT70GK08B	110	70	85	800	1600	0.85	3.20	1000	125	0.300	Fig.12	
STT70GK12B				1200								
STT70GK14B				1400								
STT70GK16B				1600								
STT70GK18B				1800								STK***B
STT70GK20B				2000								
STT70GK22B				2200								
STT70GK24B				2400								

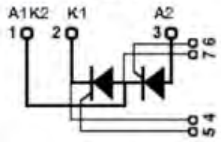

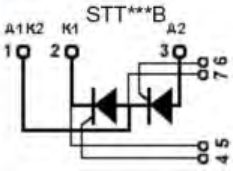

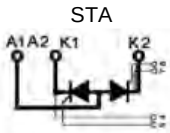

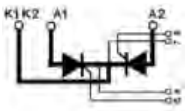

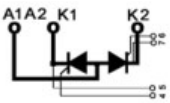

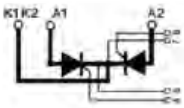

© 2023 ETATRONIC All rights reserved

Tel: +86-519-86800000 Fax: +86-519-83888666 E-mail: sales@etatronic.com www.etatronic.com

型号 TYPE	电气特性Electrical Characteristics										封装外形 Package Style	外形图 Outlines
	IT			V_{DRM}	I_{TSM}	V_{TO}	r_T	dv/dt	T_{VJM}	R_{thJC}		
	I_{TRMS}	I_{TVM}	@T_C	/ V_{RRM}								
	A	A	°C	V	A	V	mΩ	V/μs	°C	K/W		
STT90GK08	140	90	85	800	1700	0.85	2.90	1000	125	0.180	Fig.31	Fig.31
STT90GK12				1200								
STT90GK14				1400								
STT90GK16				1600								
STT90GK18				1800								
STT90GK20				2000								
STT90GK08B	140	90	85	800	1700	0.85	2.90	1000	125	0.280	Fig.12	STT
STT90GK12B				1200								
STT90GK14B				1400								
STT90GK16B				1600								
STT90GK18B				1800								
STT90GK20B				2000								
STT100GK08	157	100	85	800	1700	0.85	2.70	1000	125	0.170	Fig.31	Fig.12
STT100GK12				1200								
STT100GK14				1400								
STT100GK16				1600								
STT100GK18				1800								
STT100GK20				2000								
STT100GK22				2200								
STT100GK08B	157	100	85	800	1700	0.85	2.70	1000	125	0.270	Fig.12	STT***B
STT100GK12B				1200								
STT100GK14B				1400								
STT100GK16B				1600								
STT100GK18B				1800								
STT100GK20B				2000								
STT100GK22B				2200								
STT115GK22BT	180	115	85	2200	2500	1.20	2.30	1000	125	0.099	Fig.35	其它内部连接电路 Circuit
STT115GK24BT				2400								STA
STT115GK26BT				2600								
STT115GK28BT				2800								
STT115GK30BT				3000								STK
STT115GK34BT				3400								
STT115GK36BT				3600								
STT115GK38BT				3800								
STT116GK08	180	116	85	800	2250	0.83	2.40	1000	125	0.150	Fig.31	STA***B
STT116GK12				1200								
STT116GK14				1400								
STT116GK16				1600								
STT116GK18				1800								
STT116GK20				2000								
STT116GK22				2200								
STT116GK24				2400								
STT116GK08B	180	116	85	800	2250	0.83	2.40	1000	125	0.250	Fig.12	STK***B
STT116GK12B				1200								
STT116GK14B				1400								
STT116GK16B				1600								
STT116GK18B				1800								
STT116GK20B				2000								
STT116GK22B				2200								
STT116GK24B				2400								

© 2023 ETATRONIC All rights reserved
Tel: +86-519-86800000 Fax: +86-519-83888666 E-mail: sales@etatronic.com www.etatronic.com

型号 TYPE	电气特性Electrical Characteristics										封装外形 Package Style	外形图 Outlines
	IT			V_{DRM}	I_{TSM}	V_{TO}	r_T	dv/dt	T_{VJM}	R_{thJC}		
	I_{TRMS}	I_{TVM}	@T_C	/ V_{RRM}								
	A	A	°C	V	A	V	mΩ	V/μs	°C	K/W		
STT130GK08	204	130	85	800	4750	0.80	1.50	1000	125	0.115	Fig.32	Fig.32
STT130GK12				1200								
STT130GK14				1400								
STT130GK16				1600								
STT130GK18				1800								
STT130GK08B	204	130	85	800	4750	0.80	1.50	1000	125	0.230	Fig.14	
STT130GK12B				1200								
STT130GK14B				1400								
STT130GK16B				1600								
STT130GK18B				1800								
STT140GK08	220	140	85	800	2400	0.85	2.80	1000	140	0.100	Fig.31	Fig.14
STT140GK12				1200								
STT140GK14				1400								
STT140GK16				1600								
STT140GK18				1800								
STT140GK20				2000								
STT160GK22BT	251	160	85	2200	6000	1.20	2.30	1000	125	0.080	Fig.35	
STT160GK24BT				2400								
STT160GK28BT				2800								
STT160GK30BT				3000								
STT160GK32BT				3200								
STT160GK34BT				3400								
STT160GK36BT				3600								
STT165GK08	259	165	85	800	6000	0.80	1.60	1000	125	0.078	Fig.32	Fig.31
STT165GK12				1200								
STT165GK14				1400								
STT165GK16				1600								
STT165GK18				1800								
STT165GK20				2000								
STT165GK22				2200								
STT165GK08B	259	165	85	800	6000	0.80	1.60	1000	125	0.195	Fig.14	
STT165GK12B				1200								
STT165GK14B				1400								
STT165GK16B				1600								
STT165GK18B				1800								
STT165GK20B				2000								
STT165GK22B				2200								
STT181GK08	284	181	85	800	6000	0.88	1.15	1000	125	0.070	Fig.32	Fig.35
STT181GK12				1200								
STT181GK14				1400								
STT181GK16				1600								
STT181GK18				1800								
STT181GK08B	284	181	85	800	6000	0.88	1.15	1000	125	0.185	Fig.14	
STT181GK12B				1200								
STT181GK14B				1400								
STT181GK16B				1600								
STT181GK18B				1800								
STTF180GK08BT	350	180	85	800	6700	1.30	0.90	1000	125	0.065	Fig.35	
STTF180GK12BT				1200								
STTF180GK14BT				1400								
STTF180GK16BT				1600								
STTF180GK18BT				1800								

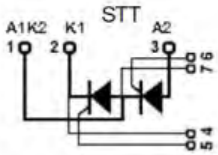

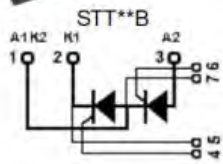

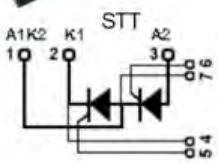

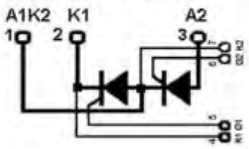

© 2023 ETATRONIC All rights reserved

Tel: +86-519-86800000 Fax: +86-519-83888666 E-mail: sales@etatronic.com www.etatronic.com

型号 TYPE	电气特性Electrical Characteristics										封装外形 Package Style	外形图 Outlines
	IT			V_{DRM}	I_{TSM}	V_{TO}	r_T	dv/dt	T_{VJM}	R_{thJC}		
	I_{TRMS}	I_{TVM}	@T_C	/ V_{RRM}								
	A	A	°C	V	A	V	mΩ	V/μs	°C	K/W		
STT200GK08B	314	200	85	800	7900	0.95	1.05	1000	125	0.152	Fig.14	Fig.14
STT200GK12B				1200								
STT200GK14B				1400								
STT200GK16B				1600								
STT200GK18B				1800								
STT201GK08	314	200	85	800	7900	0.95	1.10	1000	125	0.040	Fig.15	STT**B
STT201GK12				1200								
STT201GK14				1400								
STT201GK16				1600								
STT201GK18				1800								
STT240GK30BT	377	240	85	3000	9000	1.56	2.14	1000	140	0.032	Fig.17	Fig.17
STT240GK32BT				3200								
STT240GK34BT				3400								
STT240GK36BT				3600								
STT240GK38BT				3800								
STT240GK40BT				4000								
STT240GK42BT				4200								
STT250GK08	400	250	85	800	8000	0.85	1.00	1000	140	0.035	Fig.15	STT**BT
STT250GK12				1200								
STT250GK14				1400								
STT250GK16				1600								
STT250GK18				1800								
STT253GK08BT	400	253	85	800	8500	0.85	1.00	1000	140	0.239	Fig.35	Fig.15
STT253GK12BT				1200								
STT253GK14BT				1400								
STT253GK16BT				1600								
STT253GK18BT				1800								
STT253GK20BT				2000								
STT253GK22BT				2200								
STT253GK24BT				2400								
STT253GK26BT				2600								
STT253GK28BT				2800								
STT253GK30BT				3000								
STT253GK32BT				3200								
STT253GK36BT				3600								
STT253GK40BT				4000								
STT260GK08	408	260	85	800	8300	0.81	1.23	1000	125	0.115	Fig.32	Fig.35
STT260GK12				1200								
STT260GK14				1400								
STT260GK16				1600								
STT260GK18				1800								
STT320GK08	500	320	85	800	9000	0.80	0.82	1000	140	0.033	Fig.15	STT**BT
STT320GK12				1200								
STT320GK14				1400								
STT320GK16				1600								
STT320GK18				1800								

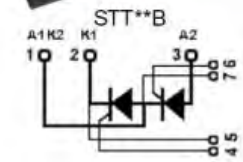

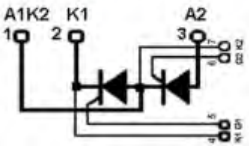

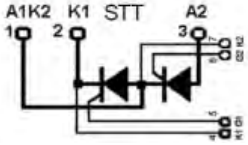

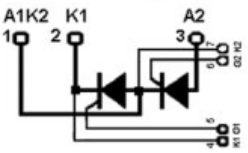

© 2023 ETATRONIC All rights reserved

Tel: +86-519-86800000 Fax: +86-519-83888666 E-mail: sales@etatronic.com www.etatronic.com

型号 TYPE	电气特性Electrical Characteristics										封装外形 Package Style	外形图 Outlines
	IT			V_{DRM}	I_{TSM}	V_{TO}	r_T	dv/dt	T_{VJM}	R_{thJC}		
	I_{TRMS}	I_{TVM}	@T_C	/ V_{RRM}								
	A	A	°C	V	A	V	mΩ	V/μs	°C	K/W		
STT320GK08BT	500	320	85	800	9200	0.80	0.82	1000	140	0.190	Fig.35	Fig.35 STT**BT 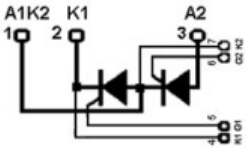
STT320GK12BT				1200								
STT320GK14BT				1400								
STT320GK16BT				1600								
STT320GK18BT				1800								
STT320GK20BT				2000								
STT320GK22BT				2200								
STT320GK24BT				2400								
STT320GK26BT				2600								
STT320GK28BT				2800								
STT320GK30BT				3000								
STT320GK32BT				3200								
STT320GK34BT				3400								
STT320GK36BT				3600								
STT320GK38BT				3800								
STT320GK40BT				4000								
STT500GK08BT	785	500	85	800	15000	0.80	0.38	1000	140	0.072	Fig.17	Fig.17 STT**BT 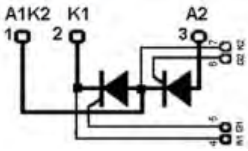
STT500GK12BT				1200								
STT500GK14BT				1400								
STT500GK16BT				1600								
STT500GK18BT				1800								
STT500GK20BT				2000								
STT500GK22BT				2200								
STT500GK24BT				2400								
STT500GK26BT				2600								
STT500GK28BT				2800								
STT500GK30BT				3000								
STT500GK32BT				3200								
STT500GK34BT				3400								
STT500GK36BT				3600								
STT500GK38BT				3800								
STT500GK40BT				4000								
STT570GK08BT	895	570	85	800	17000	0.80	0.39	1000	140	0.070	Fig.17	Fig.90 STO**BT 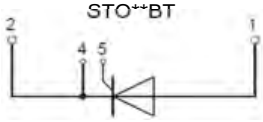
STT570GK12BT				1200								
STT570GK14BT				1400								
STT570GK16BT				1600								
STT570GK18BT				1800								
STT570GK20BT				2000								
STT570GK22BT				2200								
STT570GK24BT				2400								
STT570GK26BT				2600								
STO630GK08BT	990	630	85	800	25000	0.85	0.21	1000	140	0.042	Fig.90	
STO630GK12BT				1200								
STO630GK14BT				1400								
STO630GK16BT				1600								
STO630GK18BT				1800								
STO630GK20BT				2000								
STO630GK22BT				2200								
STO630GK24BT				2400								
STO630GK26BT				2600								

© 2023 ETATRONIC All rights reserved
Tel: +86-519-86800000 Fax: +86-519-83888666 E-mail: sales@etatronic.com www.etatronic.com

型号 TYPE	电气特性Electrical Characteristics										封装外形 Package Style	外形图 Outlines
	IT			V_{DRM}	I_{TSM}	V_{TO}	r_T	dv/dt	T_{VJM}	R_{thJC}		
	I_{TRMS}	I_{TVM}	@T_C	/ V_{RRM}								
	A	A	°C	V	A	V	mΩ	V/μs	°C	K/W		
STO860GK08BT	1350	860	85	800	31000	0.90	0.21	1000	140	0.041	Fig.90	Fig.90 STO**BT 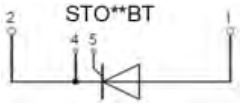
STO860GK12BT				1200								
STO860GK14BT				1400								
STO860GK16BT				1600								
STO860GK18BT				1800								
STO860GK20BT				2000								
STO860GK22BT				2200								
STO800GK08PT	1256	800	85	800	30000	0.90	0.21	1000	140	0.041	Fig.29	Fig.29 STT**PT 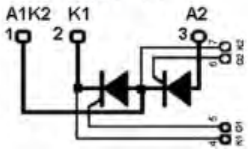
STT800GK12PT				1200								
STT800GK14PT				1400								
STT800GK16PT				1600								
STT800GK18PT				1800								
STT800GK20PT				2000								
STT800GK22PT				2200								
STT800GK24PT				2400								
STT800GK26PT				2600								
STT800GK28PT				2800								
STT800GK30PT				3000								
STT800GK08PTWC	1256	800	85	800	30000	0.90	0.21	1000	140	0.050	Fig.66	
STT800GK12PTWC				1200								
STT800GK14PTWC				1400								
STT800GK16PTWC				1600								
STT800GK18PTWC				1800								
STT800GK20PTWC				2000								
STT800GK22PTWC				2200								
STT800GK24PTWC				2400								
STT800GK26PTWC				2600								
STT800GK28PTWC				2800								
STT800GK30PTWC				3000								
STT1000GK08PT	1570	1000	85	800	37000	0.95	0.30	1000	140	0.035	Fig.29	Fig.66 STT**PTWC 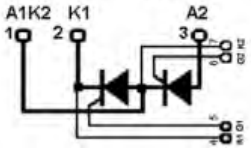
STT1000GK12PT				1200								
STT1000GK14PT				1400								
STT1000GK16PT				1600								
STT1000GK18PT				1800								
STT1000GK20PT				2000								
STT1000GK22PT				2200								
STT1000GK24PT				2400								
STT1000GK26PT				2600								
STT1000GK28PT				2800								
STT1000GK30PT				3000								
STT1000GK14PTWC	1570	1000	85	1400	37000	0.95	0.30	1000	140	0.010	Fig.66	* Without Suffix means with DCB Baseplate * Suffix " B " means with Copper Baseplate
STT1000GK16PTWC				1600								
STT1000GK18PTWC				1800								
STT1000GK20PTWC				2000								
STT1000GK22PTWC				2200								
STT1000GK24PTWC				2400								
STT1000GK26PTWC				2600								
STT1000GK28PTWC				2800								
STT1000GK30PTWC				3000								

* Suffix " BT " means Pressure Contact Technology with BusBar Terminal
* Suffix " PT " means Pressure Contact Technology with Screw Terminal
* Suffix " PTWC " means Pressure Contact Technology with Screw Terminal and Water Cooling construction

© 2023 ETATRONIC All rights reserved
Tel: +86-519-86800000 Fax: +86-519-83888666 E-mail: sales@etatronic.com www.etatronic.com

晶闸管-二极管模块
Thyristor-Diode Modules （Isolated）

E310749

型号 TYPE	电气特性Electrical Characteristics										封装外形 Package Style	外形图 Outlines
	IT			V_{DRM}	I_{TSM}	V_{TO}	r_T	dv/dt	T_{VJM}	R_{thJC}		
	I_{TRMS}	I_{TVM}	@T_C	/ V_{RRM}								
	A	A	°C	V	A	V	mΩ	V/μs	°C	K/W		
STD25G08P	39	25	85	800	420	0.85	11	1000	125	0.84	Fig.83	Fig.83
STD25G12P				1200								
STD25G14P				1400								
STD25G16P				1600								
STD25G18P				1800								
STD27GK08	42	27	85	800	520	0.85	11.0	1000	125	0.440	Fig.36	Fig.36
STD27GK12				1200								
STD27GK14				1400								
STD27GK16				1600								
STD27GK18				1800								
STD27GK08B	42	27	85	800	520	0.85	11.0	1000	125	0.540	Fig.18	STD
STD27GK12B				1200								
STD27GK14B				1400								
STD27GK16B				1600								
STD27GK18B				1800								
STD40G08S	62	40	85	800	500	0.85	5.3	1000	125	0.600	Fig.82 **SOT-227**	A1K2 K1 A2
STD40G12S				1200								
STD40G14S				1400								
STD40G16S				1600								
STD40G18S				1800								
STD49GK08	76	49	85	800	1150	0.85	5.3	1000	125	0.265	Fig.36	Fig.18
STD49GK12				1200								
STD49GK14				1400								
STD49GK16				1600								
STD49GK18				1800								
STD49GK08B	76	49	85	800	1150	0.85	5.3	1000	125	0.365	Fig.18	STD***B
STD49GK12B				1200								
STD49GK14B				1400								
STD49GK16B				1600								
STD49GK18B				1800								
STD60G08S	94	60	85	800	1100	0.78	4.8	1000	125	0.550	Fig.82 **SOT-227**	A1K2 K1 A2
STD60G12S				1200								
STD60G14S				1400								
STD60G16S				1600								
STD60G18S				1800								SOT-227
STD60G20S				2000								
STD60GK08	94	60	85	800	1500	0.85	3.7	1000	125	0.225	Fig.36	
STD60GK12				1200								
STD60GK14				1400								
STD60GK16				1600								
STD60GK18				1800								STD***S
STD60GK20				2000								
STD60GK08B	94	60	85	800	1500	0.85	3.7	1000	125	0.325	Fig.18	K1 G1
STD60GK12B				1200								
STD60GK14B				1400								
STD60GK16B				1600								
STD60GK18B				1800								A1K2 A2
STD60GK20B				2000								

© 2023 ETATRONIC All rights reserved
Tel: +86-519-86800000 Fax: +86-519-83888666 E-mail: sales@etatronic.com www.etatronic.com

型号 TYPE	电气特性Electrical Characteristics										封装外形 Package Style	外形图 Outlines
	IT			V_{DRM}	I_{TSM}	V_{TO}	r_T	dv/dt	T_{VJM}	R_{thJC}		
	I_{TRMS}	I_{TVM}	@T_C	/ V_{RRM}								
	A	A	°C	V	A	V	mΩ	V/μs	°C	K/W		
STD70GK08	110	70	85	800	1600	0.85	3.2	1000	125	0.200	Fig.36	Fig.36
STD70GK12				1200								
STD70GK14				1400								
STD70GK16				1600								
STD70GK18				1800								
STD70GK20				2000								
STD70GK22				2200								
STD70GK24				2400								
STD70GK08B	110	70	85	800	1600	0.85	3.2	1000	125	0.300	Fig.18	
STD70GK12B				1200								
STD70GK14B				1400								
STD70GK16B				1600								
STD70GK18B				1800								
STD70GK20B				2000								
STD70GK22B				2200								
STD70GK24B				2400								
STD80G08S	125	80	85	800	1070	0.85	5.5	1000	125	0.450	Fig.82 **SOT-227**	Fig.18
STD80G12S				1200								
STD80G14S				1400								
STD80G16S				1600								
STD80G18S				1800								
STD80G20S				2000								
STD90GK08	140	90	85	800	1700	0.85	3.2	1000	125	0.180	Fig.36	
STD90GK12				1200								
STD90GK14				1400								
STD90GK16				1600								
STD90GK18				1800								
STD90GK20				2000								
STD90GK08B	140	90	85	800	1700	0.85	3.2	1000	125	0.280	Fig.18	
STD90GK12B				1200								
STD90GK14B				1400								
STD90GK16B				1600								
STD90GK18B				1800								
STD90GK20B				2000								
STD100G12S	157	100	85	1200	1500	0.85	3.7	1000	125	0.350	Fig.82 **SOT-227**	SOT-227
STD100G14S				1400								
STD100G16S				1600								
STD100G18S				1800								
STD100GK08	157	100	85	800	1700	0.85	3.2	1000	125	0.170	Fig.36	
STD100GK12				1200								
STD100GK14				1400								
STD100GK16				1600								
STD100GK18				1800								
STD100GK20				2000								
STD100GK22				2200								
STD100GK08B	157	100	85	800	1700	0.85	3.2	1000	125	0.270	Fig.18	
STD100GK12B				1200								
STD100GK14B				1400								
STD100GK16B				1600								
STD100GK18B				1800								
STD100GK20B				2000								
STD100GK22B				2200								

STD

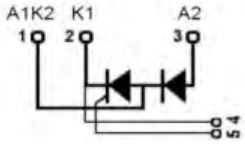

STD***B

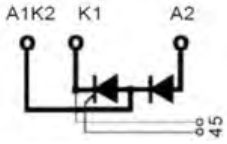

STD***S

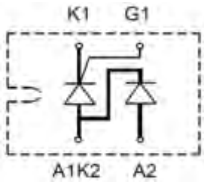

© 2023 ETATRONIC All rights reserved

Tel: +86-519-86800000 Fax: +86-519-83888666 E-mail: sales@etatronic.com www.etatronic.com

型号 TYPE	电气特性Electrical Characteristics										封装外形 Package Style	外形图 Outlines
	IT			V_{DRM}	I_{TSM}	V_{TO}	r_T	dv/dt	T_{VJM}	R_{thJC}		
	I_{TRMS}	I_{TVM}	@T_C	/ V_{RRM}								
	A	A	°C	V	A	V	mΩ	V/μs	°C	K/W		
STD116GK08	180	116	85	800	2250	0.80	2.4	1000	125	0.150	Fig.36	Fig.36
STD116GK12				1200								
STD116GK14				1400								
STD116GK16				1600								
STD116GK18				1800								
STD116GK20				2000								
STD116GK22				2200								
STD116GK24				2400								
STD116GK08B	180	116	85	800	2250	0.80	2.4	1000	125	0.250	Fig.18	Fig.18
STD116GK12B				1200								
STD116GK14B				1400								
STD116GK16B				1600								
STD116GK18B				1800								
STD116GK20B				2000								
STD116GK22B				2200								
STD116GK24B				2400								
STD130GK08	204	130	85	800	5500	0.80	1.5	1000	125	0.115	Fig.37	
STD130GK12				1200								
STD130GK14				1400								
STD130GK16				1600								
STD130GK18				1800								
STD130GK08B	204	130	85	800	5500	0.80	1.5	1000	125	0.230	Fig.20	
STD130GK12B				1200								
STD130GK14B				1400								
STD130GK16B				1600								
STD130GK18B				1800								
STD140GK08	220	140	85	800	2400	0.80	1.5	1000	140	0.100	Fig.36	Fig.37
STD140GK12				1200								
STD140GK14				1400								
STD140GK16				1600								
STD140GK18				1800								
STD165GK08	259	165	85	800	6000	0.80	1.6	1000	125	0.078	Fig.37	
STD165GK12				1200								
STD165GK14				1400								
STD165GK16				1600								
STD165GK18				1800								
STD165GK20				2000								
STD165GK22				2200								
STD165GK08B	259	165	85	800	6000	0.80	1.6	1000	125	0.195	Fig.20	Fig.20
STD165GK12B				1200								
STD165GK14B				1400								
STD165GK16B				1600								
STD165GK18B				1800								
STD165GK20B				2000								
STD165GK22B				2200								
STD181GK08	284	181	85	800	6000	0.88	1.15	1000	125	0.070	Fig.37	
STD181GK12				1200								
STD181GK14				1400								
STD181GK16				1600								
STD181GK18				1800								
STD181GK20				2000								
STD181GK22				2200								

© 2023 ETATRONIC All rights reserved

Tel: +86-519-86800000 Fax: +86-519-83888666 E-mail: sales@etatronic.com www.etatronic.com

型号 TYPE	电气特性Electrical Characteristics										封装外形 Package Style	外形图 Outlines
	IT			V_{DRM}	I_{TSM}	V_{TO}	r_T	dv/dt	T_{VJM}	R_{thJC}		
	I_{TRMS}	I_{TVM}	@T_C	/ V_{RRM}								
	A	A	°C	V	A	V	mΩ	V/μs	°C	K/W		
STD181GK08B	284	181	85	800	6000	0.88	1.15	1000	125	0.185	Fig.20	Fig.20
STD181GK12B				1200								
STD181GK14B				1400								
STD181GK16B				1600								
STD181GK18B				1800								
STD181GK20B				2000								
STD181GK22B				2200								
STD200GK08B	314	200	85	800	7900	0.95	1.1	1000	125	0.152	Fig.37	Fig.37
STD200GK12B				1200								
STD200GK14B				1400								
STD200GK16B				1600								
STD200GK18B				1800								
STD201GK08	314	200	85	800	8000	0.95	1.0	1000	125	0.040	Fig.21	Fig.21
STD201GK12				1200								
STD201GK14				1400								
STD201GK16				1600								
STD201GK18				1800								
STD240GK30BT	377	240	85	3000	9000	1.56	2.1	1000	140	0.032	Fig.17	Fig.17
STD240GK36BT				3600								
STD240GK38BT				3800								
STD240GK40BT				4000								
STD240GK42BT				4200								
STD250GK08	392	250	85	800	8000	0.85	1.0	1000	140	0.035	Fig.21	Fig.21
STD250GK12				1200								
STD250GK14				1400								
STD250GK16				1600								
STD250GK18				1800								
STD253GK08BT	400	253	85	800	8500	0.85	1.0	1000	140	0.239	Fig.56	Fig.56
STD253GK12BT				1200								
STD253GK16BT				1600								
STD253GK18BT				1800								
STD253GK22BT				2200								
STD253GK24BT				2400								
STD253GK26BT				2600								
STD320GK08	500	320	85	800	9000	0.80	0.82	1000	140	0.033	Fig.21	
STD320GK12				1200								
STD320GK14				1400								
STD320GK16				1600								
STD320GK18				1800								
STD320GK08BT	500	320	85	800	9200	0.80	0.82	1000	140	0.190	Fig.56	
STD320GK12BT				1200								
STD320GK16BT				1600								
STD320GK18BT				1800								
STD320GK22BT				2200								
STD320GK24BT				2400								
STD320GK26BT				2600								
STD500GK12BT	785	500	85	1200	15000	0.80	0.38	1000	140	0.072	Fig.17	
STD500GK16BT				1600								
STD500GK18BT				1800								
STD500GK22BT				2200								
STD500GK24BT				2400								
STD500GK26BT				2600								

© 2023 ETATRONIC All rights reserved
Tel: +86-519-86800000 Fax: +86-519-83888666 E-mail: sales@etatronic.com www.etatronic.com

型号 TYPE	电气特性Electrical Characteristics										封装外形 Package Style	外形图 Outlines
	IT			V_{DRM}	I_{TSM}	V_{TO}	r_T	dv/dt	T_{VJM}	R_{thJC}		
	I_{TRMS}	I_{TVM}	@T_C	/ V_{RRM}								
	A	A	°C	V	A	V	mΩ	V/μs	°C	K/W		
STD570GK12BT	895	570	85	1200	17000	0.80	0.37	1000	140	0.070	Fig.17	Fig.17
STD570GK16BT				1600								
STD570GK18BT				1800								
STD570GK22BT				2200								
STD570GK24BT				2400								
STD570GK26BT				2600								
STD800GK12PT	1256	800	85	1200	30000	0.90	0.21	1000	140	0.041	Fig.29	STD***BT
STD800GK16PT				1600								
STD800GK18PT				1800								
STD800GK22PT				2200								
STD800GK24PT				2400								
STD800GK28PT				2800								
STD800GK30PT				3000								
STD800GK12PTWC	1256	800	85	1200	30000	0.90	0.21	1000	140	0.050	Fig.66	Fig.29
STD800GK16PTWC				1600								
STD800GK18PTWC				1800								
STD800GK22PTWC				2200								
STD800GK24PTWC				2400								
STD800GK28PTWC				2800								
STD800GK30PTWC				3000								
STD1000GK12PT	1570	1000	85	1200	37000	0.95	0.30	1000	140	0.035	Fig.29	STD***PT
STD1000GK16PT				1600								
STD1000GK18PT				1800								
STD1000GK22PT				2200								
STD1000GK24PT				2400								
STD1000GK28PT				2800								
STD1000GK30PT				3000								
STD1000GK12PTWC	1570	1000	85	1200	37000	0.95	0.30	1000	140	0.038	Fig.66	Fig.56
STD1000GK16PTWC				1600								
STD1000GK18PTWC				1800								
STD1000GK22PTWC				2200								
STD1000GK24PTWC				2400								
STD1000GK28PTWC				2800								
STD1000GK30PTWC				3000								

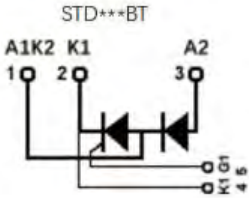

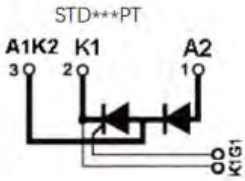

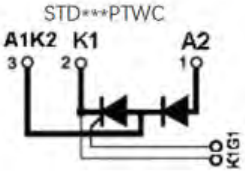

Without Suffix means with DCB Baseplate

Suffix " B " means with Copper Baseplate

Suffix " BT " means Pressure Contact Technology with BusBar Terminal

Suffix " PT " means Pressure Contact Technology with Screw Terminal

Suffix " S " means SOT-227

Suffix " P " means Plastic Flat Full package

Suffix " PTWC " means Pressure Contact Technology with Screw Terminal and Water Cooling construction

© 2023 ETATRONIC All rights reserved

Tel: +86-519-86800000 Fax: +86-519-83888666 E-mail: sales@etatronic.com www.etatronic.com

反并联晶闸管模块（固态交流开关）

Anti-Paralled Thyristor-Thyristor Modules (Solid State AC Switches)

E310749

型号 TYPE	电气特性Electrical Characteristics										封装外形 Package Style	外形图 Outlines
	IT			V_{DRM}	I_{TSM}	V_{TO}	r_T	dv/dt	T_{VJM}	R_{thJC}		
	I_{TRMS}	I_{TVM}	@T_C	/ V_{RRM}								
	A	A	°C	V	A	V	mΩ	V/μs	°C	K/W		
SSAC27GK08 ~ SSAC27GK18	42	27	85	800 ~ 1800	520	0.85	11	1000	125	0.440	Fig.38	
SSAC27GK08B ~ SSAC27GK18B	42	27	85	800 ~ 1800	520	0.85	11	1000	125	0.540	Fig.23	
SSAC49GK08 ~ SSAC49GK18	76	49	85	800 ~ 1800	1150	0.85	5.3	1000	125	0.265	Fig.38	
SSAC49GK08B ~ SSAC49GK18B	76	49	85	800 ~ 1800	1150	0.85	5.3	1000	125	0.365	Fig.23	
SSAC60GK08 ~ SSAC60GK18	94	60	85	800 ~ 1800	1500	0.85	3.7	1000	125	0.225	Fig.38	
SSAC60GK08B ~ SSAC60GK18B	94	60	85	800 ~ 1800	1500	0.85	3.7	1000	125	0.325	Fig.23	
SSAC62GK08S ~ SSAC62GK18S	62	25	85	800 ~ 1800	400	0.85	5.5	1000	125	0.455	Fig.82 **SOT-227**	
SSAC70GK08 ~ SSAC70GK24	110	70	85	800 ~ 2400	1600	0.85	3.2	1000	125	0.200	Fig.38	
SSAC70GK08B ~ SSAC70GK24B	110	70	85	800 ~ 2400	1600	0.85	3.2	1000	125	0.300	Fig.23	
SSAC74GK08S ~ SSAC74GK18S	74	34	85	800 ~ 1800	600	0.85	3.5	1000	125	0.355	SOT-227	
SSAC90GK08 ~ SSAC90GK20	140	90	85	800 ~ 2000	1700	0.85	3.2	1000	125	0.180	Fig.38	
SSAC90GK08B ~ SSAC90GK20B	140	90	85	800 ~ 2000	1700	0.85	3.2	1000	125	0.280	Fig.23	
SSAC90GK08S ~ SSAC90GK18S	90	41	85	800 ~ 1800	1700	0.85	3.2	1000	125	0.300	Fig.82 **SOT-227**	
SSAC100GK08 ~ SSAC100GK22	157	100	85	800 ~ 2200	1700	0.85	3.2	1000	125	0.170	Fig.38	
SSAC100GK08B ~ SSAC100GK22B	157	100	85	800 ~ 2200	1700	0.85	3.2	1000	125	0.270	Fig.23	
SSAC116GK08 ~ SSAC116GK18	180	116	85	800 ~ 1800	2250	0.80	2.4	1000	125	0.150	Fig.38	
SSAC116GK08B ~ SSAC116GK18B	180	116	85	800 ~ 1800	2250	0.80	2.4	1000	125	0.250	Fig.23	
SSAC130GK08B ~ SSAC130GK18B	204	130	85	800 ~ 1800	5500	0.80	1.5	1000	125	0.230	Fig.4	
SSAC165GK08B ~ SSAC165GK22B	259	165	85	800 ~ 2200	6000	0.80	1.6	1000	125	0.195	Fig.4	
SSAC181GK08B ~ SSAC181GK18B	284	181	85	800 ~ 1800	6000	0.88	1.15	1000	125	0.185	Fig.4	
SSAC200GK08B ~ SSAC200GK18B	314	200	85	800 ~ 1800	7900	0.95	1.05	1000	125	0.152	Fig.4	

Fig.38

SSAC**GK

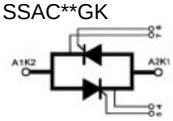

Fig.23

SSAC**GK**B

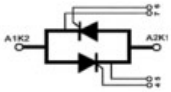

Fig.82 (**SOT-227**)

SSAC**GK**S

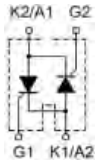

Fig.4

SSAC**B

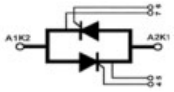

Without Suffix means with DCB Baseplate
Suffix " B " means with Copper Baseplate

© 2023 ETATRONIC All rights reserved

Tel: +86-519-86800000 Fax: +86-519-83888666 E-mail: sales@etatronic.com www.etatronic.com

单相桥式半控模块(带续流二极管)

E310749

Single Phase Half Controlled Bridge Modules With Free Wheeling Diode

型号 TYPE	电气特性Electrical Characteristics									封装外形 Package Style	内部电路 Circuit	外形图 Outlines
	Id_{AV}		V_{DRM} /V_{RRM}	I_{TSM}	V_{TO}	r_T	dv/dt	T_{VJM}	R_{thJC}			
	A	°C	V	A	V	mΩ	V/µs	°C	K/W			
S1PHB15G08 ~ S1PHB15G18	15	85	800 ~ 1800	190	1.0	40	1000	125	2.40	Fig.13	1	Fig.13
S1PHB28G08 ~ S1PHB28G18	28	85	800 ~ 1800	300	0.9	15	1000	125	1.40	Fig.13	1	
S1PHB36G08 ~ S1PHB36G18	36	85	800 ~ 1800	320	0.85	13	1000	125	1.15	Fig.13	1	Fig.59
S1PHB40G08 ~ S1PHB40G18	40	85	800 ~ 1800	360	0.85	12	1000	125	1.00	Fig.13	1	
S1PHB41GK08B ~ S1PHB41GK18B	41	85	800 ~ 1800	430	0.88	13	1000	125	0.98	Fig.59	1	
S1PHB50GK08B ~ S1PHB50GK18B	50	85	800 ~ 1800	540	0.85	11	1000	125	0.90	Fig.59	1	Fig.41
S1PHB55G08B ~ S1PHB55G18B	55	85	800 ~ 1800	550	0.85	11	1000	125	0.90	Fig.41	1	
S1PHB75GK08B ~ S1PHB75GK18B	75	85	800 ~ 1800	810	0.83	10.5	1000	125	0.85	Fig.59	1	
S3PHBD70G08B ~ S3PHBD70G18B	70	85	800 ~ 1800	550	0.85	11	1000	125	0.90	Fig.41	2	Fig.43
S3PHBD110G08B ~ S3PHBD110G18B	110	85	800 ~ 1800	1150	0.85	11	1000	125	0.65	Fig.43	2	
S3PHBD180G08B ~ S3PHBD180G18B	180	85	800 ~ 1800	1500	0.85	3.5	1000	125	0.55	Fig.43	2	Circuit 1 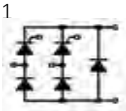
S3PHB70G08B ~ S3PHB70G18B	70	85	800 ~ 1800	550	0.85	11	1000	125	0.90	Fig.41	3	
S3PHB110G08B ~ S3PHB110G18B	110	85	800 ~ 1800	1150	0.85	11	1000	125	0.65	Fig.43	3	Circuit 2 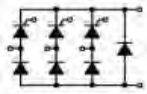
S3PHB180G08B ~ S3PHB180G18B	180	85	800 ~ 1800	1500	0.85	11	1000	125	0.46	Fig.43	3	
S3PFB70G08B ~ S3PFB70G18B	70	85	800 ~ 1800	550	0.85	11	1000	125	0.90	Fig.41	4	Circuit 3 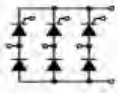
S3PFB110G08B ~ S3PFB110G18B	110	85	800 ~ 1800	1150	0.85	11	1000	125	0.65	Fig.43	4	
S3PFB180G08B ~ S3PFB180G18B	180	85	800 ~ 1800	1500	0.85	11	1000	125	0.46	Fig.43	4	Circuit 4 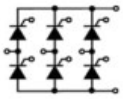

Suffix " B " means with Copper Baseplate; Without Suffix means with DCB Baseplate;

© 2023 ETATRONIC All rights reserved

Tel: +86-519-86800000 Fax: +86-519-83888666 E-mail: sales@etatronic.com www.etatronic.com

三相半桥式晶闸管模块(电焊机专用)
Three Phase Thyristor Half Bridge Modules (For Welding Machines)

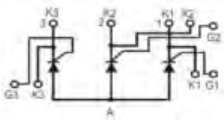

型号 TYPE	电气特性Electrical Characteristics										封装外形 Package Style	外形图 Outlines
	I_T			V_{DRM}	I_{TSM}	V_{TM}	I_{GT}/V_{GT}	dv/dt	T_{VJM}	R_{thJC}		
	I_{TRMS}	I_{TVM} @T_C		/V_{RRM}	50Hz							
	A	A	°C	V	A	V	mA/V	V/μs	°C	°C/W		
3TA60GK03NB-A	94	60	85	300	1640	1.25	75/1.2	500	150	0.35	Fig.25	Fig.25
3TA60GK04NB-A				400								
3TA60GK06NB-A				600								
3TA60GK03NB-B	94	60	85	300	1640	1.25	75/1.2	500	150	0.37	Fig.51	
3TA60GK04NB-B				400								
3TA60GK06NB-B				600								
3TA80GK03NB-A	125	80	85	300	2280	1.20	75/1.2	500	150	0.34	Fig.25	
3TA80GK04NB-A				400								
3TA80GK06NB-A				600								
3TA80GK03NB-B	125	80	85	300	2280	1.20	75/1.2	500	150	0.36	Fig.51	
3TA80GK04NB-B				400								
3TA80GK06NB-B				600								
3TA100GK03NB-A	157	100	85	300	3200	1.20	75/1.2	500	150	0.30	Fig.25	Fig.51
3TA100GK04NB-A				400								
3TA100GK06NB-A				600								
3TA100GK03NB-B	157	100	85	300	3200	1.20	75/1.2	500	150	0.32	Fig.51	
3TA100GK04NB-B				400								
3TA100GK06NB-B				600								
3TA130GK03NB-A	204	130	85	300	3800	1.20	75/1.2	500	150	0.20	Fig.25	
3TA130GK04NB-A				400								
3TA130GK06NB-A				600								
3TA130GK03NB-B	204	130	85	300	3800	1.20	75/1.2	500	150	0.22	Fig.51	Fig.19
3TA130GK04NB-B				400								
3TA130GK06NB-B				600								
3TA150GK03NB	235	150	85	300	4000	1.20	100/1.5	500	150	0.16	Fig.47	
3TA150GK04NB				400								
3TA150GK06NB				600								
3TA151GK03NB	235	150	85	300	4000	1.20	100/1.5	500	150	0.15	Fig.19	
3TA151GK04NB				400								
3TA151GK06NB				600								
3TA200GK03NB	314	200	85	300	5400	1.20	100/1.5	500	150	0.13	Fig.47	
3TA200GK04NB				400								
3TA200GK06NB				600								Fig.47
3TA201GK03NB	314	200	85	300	5400	1.20	100/1.5	500	150	0.12	Fig.19	
3TA201GK04NB				400								
3TA201GK06NB				600								
3TA250GK03NB	392	250	85	300	6750	1.20	100/1.5	500	150	0.09	Fig.47	
3TA250GK04NB				400								
3TA250GK06NB				600								
3TA251GK03NB	392	250	85	300	6750	1.20	100/1.5	500	150	0.08	Fig.19	
3TA251GK04NB				400								
3TA251GK06NB				600								

© 2023 ETATRONIC All rights reserved
Tel: +86-519-86800000 Fax: +86-519-83888666 E-mail: sales@etatronic.com www.etatronic.com

高结温低漏电流肖特基势垒二极管

High Tjm Low IRRM Schottky Barrier Diodes Tj = - 65°C ~ +175°C, Tjm = +175°C

型号 TYPE	电气特性Electrical Characteristics						内部电路 Circuits	封装外形 Package Style	外形图 Outlines
	$V_R=V_{RRM}$	I_{FAV}	I_{FSM}	I_{RRM} at $V_R=V_{RRM}$		V_{Fmax}			
				25°C	125°C				
	V	A	A	mA	mA	V			
MBR5100	100	5	120	0.10	10	0.85	1	TO -220AC	
MBR5150	150	5	120	0.10	15	0.95	1	TO -220AC	
MBR5200	200	5	120	0.10	15	0.95	1	TO -220AC	
MBR860	60	8	150	0.10	15	0.75	1	TO -220AC	
MBR8100	100	8	125	0.10	15	0.85	1	TO -220AC	
MBR1030	30	10	150	0.10	15	0.60	1	TO -220AC	
MBR1035	35	10	150	0.10	15	0.60	1	TO -220AC	
MBR1040	40	10	150	0.10	15	0.65	1	TO -220AC	
MBR1045	45	10	150	0.10	15	0.65	1	TO -220AC	
MBR1050	50	10	150	0.10	25	0.65	1	TO -220AC	
MBR1060	60	10	150	0.10	25	0.75	1	TO -220AC	
MBR1070	70	10	150	0.10	50	0.75	1	TO -220AC	
MBR1080	80	10	150	0.10	50	0.85	1	TO -220AC	
MBR1090	90	10	150	0.10	50	0.85	1	TO -220AC	
MBR10100	100	10	150	0.20	50	0.85	1	TO -220AC	
MBR10150	150	10	150	0.20	50	0.90	1	TO -220AC	
MBR10200	200	10	150	0.50	50	0.95	1	TO -220AC	
MBR1060CT	60	10	125	0.10	50	0.80	2	TO -220AB	
MBR10100CT	100	10	120	0.10	15	0.85	2	TO -220AB	
MBR10150CT	150	10	120	0.05	15	0.95	2	TO -220AB	
MBR10200CT	200	10	120	0.05	15	0.95	2	TO -220AB	
MBR1640CT	40	16	150	0.20	15	0.65	2	TO -220AB	
MBR1645CT	45	16	150	0.20	15	0.65	2	TO -220AB	
MBR1660CT	60	16	150	1.00	50	0.75	2	TO -220AB	
MBR16100CT	100	16	125	0.10	50	0.85	2	TO -220AB	
MBR2040CT	40	20	150	0.10	15	0.80	2	TO -220AB	
MBR2045CT	45	20	150	0.10	15	0.80	2	TO -220AB	
MBR2060CT	60	20	150	0.10	15	0.85	2	TO -220AB	
MBR20100CT	100	20	150	0.50	100	0.95	2	TO -220AB	
MBR20150CT	150	20	150	1.00	100	0.90	2	TO -220AB	
MBR20200CT	200	20	150	1.00	200	0.95	2	TO -220AB	
MBR20250CT	250	20	135	1.00	200	0.98	2	TO -220AB	
MBR3040CT	40	30	200	0.20	40	0.75	2	TO -220AB	
MBR3045CT	45	30	200	0.20	40	0.75	2	TO -220AB	
MBR3060CT	60	30	200	1.00	40	0.76	2	TO -220AB	
MBR3030PT	30	30	200	1.00	60	0.76	2	TO -247AD	
MBR3040PT	40	30	200	1.00	60	0.76	2	TO -247AD	
MBR3045PT	45	30	200	1.00	60	0.76	2	TO -247AD	
MBR3060PT	60	30	200	1.00	100	0.80	2	TO -247AD	
MBR30100PT	100	30	250	1.00	100	0.85	2	TO -247AD	
MBR30150PT	150	30	245	1.00	100	0.90	2	TO -247AD	
MBR30200PT	200	30	240	1.00	100	0.95	2	TO -247AD	
MBR4040PT	40	40	400	1.00	50	0.65	2	TO -247AD	
MBR4045PT	45	40	400	1.00	50	0.65	2	TO -247AD	
MBR4060PT	60	40	400	1.00	100	0.80	2	TO -247AD	
MBR40100PT	100	40	300	1.00	100	0.85	2	TO -247AD	
MBR40150PT	150	40	300	1.00	100	0.90	2	TO -247AD	
MBR40200PT	200	40	300	1.00	100	0.95	2	TO -247AD	
MBR6030PT	30	60	500	1.00	50	0.65	2	TO -247AD	
MBR6035PT	35	60	500	1.00	50	0.65	2	TO -247AD	

TO-220AC

TO-220AB

TO-247AD

内部电路图 Circuits

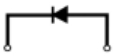

Circuit 1
(TO-220AC)
(TO-247AC)

Circuit 2
(TO-220AB)
(TO-247AD)

© 2023 ETATRONIC All rights reserved

Tel: +86-519-86800000 Fax: +86-519-83888666 E-mail: sales@etatronic.com www.etatronic.com

型号 TYPE	电气特性Electrical Characteristics						内部电路 Circuits	封装外形 Package Style	外形图 Outlines
	$V_R=V_{RRM}$	I_{FAV}	I_{FSM}	I_{RRM} at $V_R=V_{RRM}$		V_{Fmax}			
				25°C	125°C				
	V	A	A	mA	mA	V			
MBR6040PT	40	60	500	1.00	50	0.65	2	TO -247AD	
MBR6045PT	45	60	500	1.00	50	0.65	2	TO -247AD	TO-247AD
MBR6060PT	60	60	500	1.00	50	0.80	2	TO -247AD	
MBR60100PT	100	60	500	1.00	50	0.85	2	TO -247AD	
MBR60150PT	150	60	500	1.00	50	0.90	2	TO -247AD	
MBR60200PT	200	60	500	1.00	50	0.95	2	TO -247AD	
MBR2×40-60	60	2×40	450	1.00	50	0.80	3	SOT-227	Circuit 2
MBR2×40-100	100	2×40	450	1.00	50	0.85	3	SOT-227	
MBR2×40-150	150	2×40	450	1.00	50	0.90	3	SOT-227	
MBR2×40-200	200	2×40	450	1.00	50	0.95	3	SOT-227	
MBR2×60-30	30	2×60	800	4.00	50	0.65	3	SOT-227	
MBR2×60-40	40	2×60	800	4.00	50	0.65	3	SOT-227	
MBR2×60-60	60	2×60	800	4.00	50	0.80	3	SOT-227	
MBR2×60-100	100	2×60	700	4.00	100	0.85	3	SOT-227	
MBR2×60-150	150	2×60	700	4.00	100	0.90	3	SOT-227	SOT-227
MBR2×60-200	200	2×60	700	4.00	100	0.95	3	SOT-227	
MBR2×80-30	30	2×80	900	4.00	200	0.66	3	SOT-227	
MBR2×80-40	40	2×80	900	4.00	200	0.66	3	SOT-227	
MBR2×80-45	45	2×80	900	4.00	200	0.66	3	SOT-227	
MBR2×80-60	60	2×80	900	4.00	200	0.80	3	SOT-227	Circuit3
MBR2×80-100	100	2×80	900	4.00	200	0.85	3	SOT-227	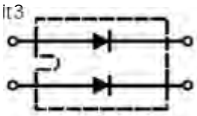
MBR2×80-150	150	2×80	900	4.00	200	0.90	3	SOT-227	
MBR2×80-200	200	2×80	900	4.00	200	0.95	3	SOT-227	
MBR2×100-60	60	2×100	1200	4.00	200	0.80	3	SOT-227	
MBR2×100-100	100	2×100	1200	4.00	200	0.85	3	SOT-227	
MBR2×100-150	150	2×100	1200	4.00	200	0.90	3	SOT-227	
MBR2×100-200	200	2×100	1200	4.00	200	0.95	3	SOT-227	
MBR2×120-30	30	2×120	1800	4.00	200	0.62	3	SOT-227	SOT-227
MBR2×120-40	40	2×120	1800	4.00	200	0.65	3	SOT-227	
MBR2×120-45	45	2×120	1800	4.00	200	0.65	3	SOT-227	
MBR2×120-60	60	2×120	1800	4.00	200	0.80	3	SOT-227	
MBR2×120-100	100	2×120	1800	4.00	200	0.85	3	SOT-227	Circuit 4
MBR2×120-150	150	2×120	1800	4.00	200	0.90	3	SOT-227	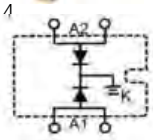
MBR2×120-200	200	2×120	1800	4.00	200	0.95	3	SOT-227	
MBR2×160-60NB	60	2×160	1600	4.00	200	0.80	4	SOT-227	
MBR2×160-100NB	100	2×160	1400	4.00	200	0.85	4	SOT-227	
MBR2×160-150NB	150	2×160	1350	4.00	200	0.90	4	SOT-227	
MBR2×160-200NB	200	2×150	1300	4.00	200	0.95	4	SOT-227	
MBR150-45NB	45	150	1400	2.00	20	0.65	5	Fig.42	
MBR150-60NB	60	150	1400	2.00	20	0.80	5	Fig.42	
MBR150-100NB	100	150	1400	2.00	20	0.85	5	Fig.42	Fig.42
MBR150-150NB	150	150	1400	2.00	20	0.90	5	Fig.42	
MBR150-200NB	200	150	1400	2.00	20	0.95	5	Fig.42	
MBR250-45NB	45	250	2100	4.00	40	0.65	5	Fig.42	
MBR250-60NB	60	250	2100	4.00	40	0.75	5	Fig.42	
MBR250-100NB	100	250	2100	4.00	40	0.85	5	Fig.42	
MBR250-150NB	150	250	2100	4.00	40	0.85	5	Fig.42	Circuit 5
MBR250-200NB	200	250	2100	4.00	40	0.85	5	Fig.42	
MBR300-45NB	45	300	3000	8.00	80	0.65	5	Fig.42	
MBR300-60NB	60	300	3000	8.00	80	0.75	5	Fig.42	
MBR300-100NB	100	300	3000	8.00	80	0.85	5	Fig.42	
MBR300-150NB	150	300	3000	8.00	80	0.85	5	Fig.42	

© 2023 ETATRONIC All rights reserved
Tel: +86-519-86800000 Fax: +86-519-83888666 E-mail: sales@etatronic.com www.etatronic.com

型号 TYPE	电气特性Electrical Characteristics						内部电路 Circuits	封装外形 Package Style	外形图 Outlines
	$V_R=V_{RRM}$	I_{FAV}	I_{FSM}	I_{RRM} at $V_R=V_{RRM}$		V_{Fmax}			
				25°C	125°C				
	V	A	A	mA	mA	V			
MBR300-200NB	200	300	3000	8.00	80	0.85	5	Fig.42	
MBR400-45NB	45	400	4500	10.00	120	0.65	5	Fig.42	
MBR400-60NB	60	400	4500	10.00	120	0.75	5	Fig.42	
MBR400-100NB	100	400	4500	10.00	120	0.85	5	Fig.42	
MBR400-200NB	200	400	4500	10.00	120	0.95	5	Fig.42	
SRBD20045CT	45	200	1200	2.00	20	0.65	6	Fig.45	
SRBD20060CT	60	200	1200	2.00	20	0.75	6	Fig.45	
SRBD200100CT	100	200	1200	2.00	20	0.85	6	Fig.45	
SRBD200150CT	150	200	1200	2.00	20	0.90	6	Fig.45	
SRBD200200CT	200	200	1200	2.00	20	0.95	6	Fig.45	
SRBD20045CTD2	45	200	1200	2.00	20	0.65	6	Fig.44.	
SRBD20060CTD2	60	200	1200	2.00	20	0.75	6	Fig.44.	
SRBD200100CTD2	100	200	1200	2.00	20	0.85	6	Fig.44.	
SRBD200150CTD2	150	200	1200	2.00	20	0.90	6	Fig.44.	
SRBD200200CTD2	200	200	1200	2.00	20	0.95	6	Fig.44.	
SRBD30045CT	45	300	1800	4.00	40	0.65	6	Fig.45	
SRBD30060CT	60	300	1800	4.00	40	0.75	6	Fig.45	
SRBD300100CT	100	300	1800	4.00	40	0.85	6	Fig.45	
SRBD300150CT	150	300	1800	4.00	40	0.90	6	Fig.45	
SRBD300200CT	200	300	1800	4.00	40	0.95	6	Fig.45	
SRBD30045CTD3	45	300	1800	4.00	40	0.65	6	Fig.52	
SRBD30060CTD3	60	300	1800	4.00	40	0.75	6	Fig.52	
SRBD300100CTD3	100	300	1800	4.00	40	0.85	6	Fig.52	
SRBD300150CTD3	150	300	1800	4.00	40	0.90	6	Fig.52	
SRBD300200CTD3	200	300	1800	4.00	40	0.95	6	Fig.52	
SRBD40045CT	45	400	2500	8.00	80	0.65	6	Fig.45	
SRBD40060CT	60	400	2500	8.00	80	0.75	6	Fig.45	
SRBD400100CT	100	400	2500	8.00	80	0.85	6	Fig.45	
SRBD400150CT	150	400	2500	8.00	80	0.90	6	Fig.45	
SRBD400200CT	200	400	2500	8.00	80	0.95	6	Fig.45	
SRBD40045CTD3	45	400	2500	8.00	80	0.65	6	Fig.52	
SRBD40060CTD3	60	400	2500	8.00	80	0.75	6	Fig.52	
SRBD400100CTD3	100	400	2500	8.00	80	0.85	6	Fig.52	
SRBD400150CTD3	150	400	2500	8.00	80	0.90	6	Fig.52	
SRBD400200CTD3	200	400	2500	8.00	80	0.95	6	Fig.52	

Fig.42

Circuit 5

Fig.45

Circuit 6

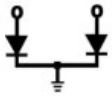

Fig.44

Circuit 6

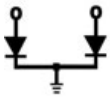

Fig.52

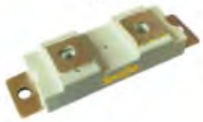

Circuit 6

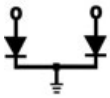

Suffix " NB " means Non-Isolated Package with Copper Baseplate

© 2023 ETATRONIC All rights reserved

Tel: +86-519-86800000 Fax: +86-519-83888666 E-mail: sales@etatronic.com www.etatronic.com

整流二极管分立器件 Diode Discretes

Tj = - 40°C ~ +150°C, Tjm = +150°C

型号 TYPE	电气特性Electrical Characteristics							内部电路 Circuit	封装外形 Package Style	外形图 Outlines
	IFAVM @Tc=100℃	VR=VRRM	IFRMS	IFSM	VFmax at IFM		RthJC			
	A	V	A	A	V	A	K/W			
SD1001 ~ SD1016	10	100 ~ 1600	16	150	1.25	10	1.29	1	TO -220AC	TO-220AC
SD2001 ~ SD2016	20	100 ~ 1600	32	250	1.25	20	1.25	1	TO -220AC	
SD2001P ~ SD2016P	20	100 ~ 1600	32	250	1.25	20	1.35	1	TO-220F-2L	TO-220F-2L
SD3001 ~ SD3016	30	100 ~ 1600	47	300	1.25	30	1.00	1	TO -220AC	
SD4502 ~ SD4516	45	200 ~ 1600	70	475	1.25	45	0.55	1	TO -247AC	TO-247AC
SD7004 ~ SD7018	70	400 ~ 1800	110	1500	1.17	70	0.2	1	TO -247AC	
70TD40 ~ 70TD180	70	400 ~ 1800	110	1500	1.17	70	0.2	1	TO -247AC	
SDD10N01 ~ SDD10N16	2×10	100 ~ 1600	2×16	100	1.25	10	1.25	2	TO - 220AB	TO-220AB
SDD25N02 ~ SDD25N16	2×25	200 ~ 1600	2×40	300	1.25	25	0.45	2	TO -247AD	
SDD45N02 ~ SDD45N18	2×45	100 ~ 1800	2×70	485	1.25	45	0.2	2	TO -247AD	TO-247AD
SDD46N02 ~ SDD46N18	2×45	200 ~ 1800	2×70	490	1.25	46	0.2	2	TO -247P	
SDD80N02 ~ SDD80N18	2×80	200 ~ 1800	2×125	900	1.25	80	0.15	2	TO -247P	
SD150-01NB ~ SD150-16NB	150	100 ~ 1600	235	1500	1.25	150	1.00	3	Fig.42	TO-247P
SD250-01NB ~ SD250-16NB	250	100 ~ 1600	390	2500	1.25	250	0.80	3	Fig.42	
SD300-01NB ~ SD300-16NB	300	100 ~ 1600	470	3000	1.25	300	0.75	3	Fig.42	
SD400-01NB ~ SD400-16NB	400	100 ~ 1600	620	4000	1.25	400	0.70	3	Fig.42	Fig.42

内部电路 Circuit

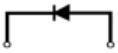

Circuit1

Circuit 2

Circuit3

Suffix "NB" means Non-Isolated with Copper Base

© 2023 ETATRONIC All rights reserved

Tel: +86-519-86800000 Fax: +86-519-83888666 E-mail: sales@etatronic.com www.etatronic.com

单相整流桥
Single Phase Bridge Rectifiers

E310749

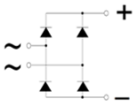

型号 TYPE	电气特性Electrical Characteristics							封装外形 Package Style	外形图 Outlines
	I_{FAV}	$V_R=V_{RRM}$	I_{FSM}	I_R at $V_R=V_{RRM}$ 25°C	I_R at $V_R=V_{RRM}$ 125°C	V_{Fmax} at I_{FM}	V_{Fmax} at I_{FM}		
	A	V	A	μA	μA	V	A		
GBJ1502 ~ GBJ1516	15	200 ~ 1600	180	10	500	1.05	7.5	Fig.83 **(GBJ)**	Fig.83 (GBJ)
GBJ2002 ~ GBJ2016	20	200 ~ 1600	240	10	600	1.05	10	Fig.83 **(GBJ)**	
GBJ2502 ~ GBJ2516	25	200 ~ 1600	300	10	800	1.05	12.5	Fig.83 **(GBJ)**	
GBJ3502 ~ GBJ3516	35	200 ~ 1600	420	15	1000	1.10	17.5	Fig.83 **(GBJ)**	Fig.57
S1PDB1502 ~ S1PDB1518	15	200 ~ 1800	300	5	500	1.10	7.5	Fig.57	
S1PDB2502 ~ S1PDB2518	25	200 ~ 1600	350	10	800	1.10	12.5	Fig.57	
S1PDB3502 ~ S1PDB3518	35	200 ~ 1800	400	20	1000	1.10	17.5	Fig.57	Fig.27
S1PDB4002 ~ S1PDB4018	40	200 ~ 1800	500	30	1000	1.10	20	Fig.57	
S1PDB5002 ~ S1PDB5018	50	200 ~ 1800	600	40	1000	1.10	25	Fig.57	
S1PDB40N02 ~ S1PDB40N18	40	200 ~ 1800	500	30	1000	1.10	20	Fig.27	Fig.82 (**SOT-227**)
S1PDB50N02 ~ S1PDB50N18	50	200 ~ 1800	600	40	1000	1.10	25	Fig.27	
S1PDB40N08S ~ S1PDB40N18S	40	800 ~ 1800	450	200	4	1.25	60	SOT-227	
S1PDB52N08 ~ S1PDB52N18	52	800 ~ 1800	520	300	5	1.25	78	Fig.7	Fig.7
S1PDB60N08 ~ S1PDB60N18	60	800 ~ 1800	600	500	8	1.25	90	Fig.7	
S1PDB72N08 ~ S1PDB72N18	72	800 ~ 1800	720	800	10	1.25	110	Fig.7	
S1PDB100N08 ~ S1PDB100N18	100	800 ~ 1800	1000	800	11	1.25	150	Fig.8	
S1PDB122N08 ~ S1PDB122N18	122	800 ~ 1800	1200	800	12	1.25	180	Fig.8	Fig. 8
S1PDB174N08 ~ S1PDB174N18	174	800 ~ 1800	1700	1000	15	1.25	260	Fig.8	

© 2023 ETATRONIC All rights reserved
Tel: +86-519-86800000 Fax: +86-519-83888666 E-mail: sales@etatronic.com www.etatronic.com

三相桥式整流模块
Three Phase Rectifier Module

E310749

型号 TYPE	电气特性Electrical Characteristics								封装外形 Package Style	外形图 Outlines
	I_{DAV} @Tc=100℃	V_{RRM}	I_{FSM}	V_{TO}	r_T	V_{Fmax} at I_{FM} per chip		R_{thJC} per chip		
	A	V	A	A	mΩ	V	A	K/W		
S3PDB12N08P ~ S3PDB12N16P	12	800 1600	100	0.8	10	1.20	12.0	7.00	Fig.46	Fig.46
S3PDB18N08P ~ S3PDB18N16P	18	800 1600	150	0.8	8.5	1.20	18.0	6.90	Fig.46	
S3PDB24N08P ~ S3PDB24N16P	24	800 ~ 1600	200	0.8	6.1	1.20	24.0	5.80	Fig.46	Fig.10
S3PDB24N08PAV ~ S3PDB24N16PAV	24	800 ~ 1600	200	0.8	6.1	1.20	24.0	5.80	Fig.46	
S3PDB25N08 ~ S3PDB25N18	25	800 ~ 1800	100	0.8	40	1.20	25.0	2.30	Fig.10	
S3PDB30N08 ~ S3PDB30N18	30	800 ~ 1800	270	0.8	40	1.20	30.0	0.90	Fig.24	Fig.24
S3PDB3508 ~ S3PDB3518	35 @55℃	800 ~ 1800	250	0.8	40	1.20	35.0	3.80	Fig.55	
S3PDB35N08 ~ S3PDB35N18	35	800 ~ 1800	350	0.8	7.5	1.20	35.0	3.40	Fig.28	
S3PDB36N08P ~ S3PDB36N16P	36	800 ~ 1600	300	0.8	5.2	1.20	36.0	4.50	Fig.46	Fig.55
S3PDB4008 ~ S3PDB4018	40 @55℃	800 ~ 1800	400	0.8	8	1.20	40.0	8.50	Fig.55	
S3PDB40N08 ~ S3PDB40N18	40	800 ~ 1800	400	0.8	8	1.20	40.0	3.35	Fig.28	
S3PDB42N08P ~ S3PDB42N16P	42	800 ~ 1600	400	0.8	4.8	1.20	42.0	4.30	Fig.46	Fig.28
S3PDB5008 ~ S3PDB5018	50 @55℃	800 ~ 1800	500	0.8	40	1.20	50.0	8.00	Fig.55	
S3PDB50N12 ~ S3PDB50N18	50	1200 ~ 1800	460	0.8	8	1.20	50.0	2.85	Fig.28	
S3PDB51N08 ~ S3PDB51N18	50	800 ~ 1800	460	0.8	8	1.20	50.0	0.24	Fig.9	Fig.9
S3PDB60N08 ~ S3PDB60N18	60	800 ~ 1800	550	0.8	8	1.20	60.0	0.24	Fig.9	
S3PDB61N08 ~ S3PDB61N18	61	800 ~ 1800	850	0.8	5	1.25	60.0	0.27	Fig.49	
S3PDB62N08 ~ S3PDB62N18	60	800 ~ 1800	550	0.8	5	1.25	60.0	0.31	Fig.71	Fig.49
B6U61A08 ~ B6U61A18	60	800 ~ 1800	550	0.8	5	1.25	60.0	0.31	Fig.71	
S3PDB70N08 ~ S3PDB70N18	70	800 ~ 1800	590	0.8	6	1.20	70.0	1.30	Fig.24	
S3PDB80N08 ~ S3PDB80N18	80	800 ~ 1800	750	0.8	5	1.20	80.0	1.10	Fig.9	

© 2023 ETATRONIC All rights reserved
Tel: +86-519-86800000 Fax: +86-519-83888666 E-mail: sales@etatronic.com www.etatronic.com

型号 TYPE	电气特性Electrical Characteristics								封装外形 Package Style	外形图 Outlines
	I_{DAV} @Tc=100℃	V_{RRM}	I_{FSM}	V_{TO}	r_T	V_{Fmax} at I_{FM} per chip		R_{thJC} per chip		
	A	V	A	A	mΩ	V	A	K/W		
S3PDB81N08 ~ S3PDB81N18	81	800 ~ 1800	750	0.8	8	1.20	80.0	1.10	Fig.49	Fig.49
S3PDB85N08 ~ S3PDB85N18	85	800 ~ 1800	750	0.8	6	1.20	85.0	1.30	Fig.24	
S3PDB86N08 ~ S3PDB86N18	86	800 ~ 1800	530	0.8	7.5	1.20	86.0	1.20	Fig.10	
S3PDB91N08 ~ S3PDB91N18	91	800 ~ 1800	650	0.8	5	1.20	90.0	0.92	Fig.30	Fig.24
S3PDB99N08 ~ S3PDB99N18	100	800 ~ 1800	920	0.8	4	1.20	100.0	0.90	Fig.9	
S3PDB100N08 ~ S3PDB100N18	100	800 ~ 1800	920	0.8	4	1.20	100.0	0.90	Fig.11	
S3PDB101N08 ~ S3PDB101N18	100	800 ~ 1800	920	0.8	4	1.20	100.0	1.00	Fig.49	Fig.10
S3PDB104N08 ~ S3PDB104N18	100	800 ~ 1800	920	0.3	5	1.25	100.0	0.14	Fig.50	
B6U104A08 ~ B6U104A18	100	800 ~ 1800	1250	0.3	5	1.25	100.0	0.14	Fig.50	
S3PDB108N08E2 ~ S3PDB108N18E2	117	800 ~ 1800	900	0.5	3	1.35	117.0	0.14	Fig.72	Fig.30
S3PDB130N08 ~ S3PDB130N18	130	800 ~ 1800	1200	0.8	4	1.20	130.0	0.80	Fig.11	
S3PDB150N08 ~ S3PDB150N18	150	800 ~ 1800	1500	0.3	8	1.60	150.0	0.14	Fig.73	Fig.9
S3PDB160N08 ~ S3PDB160N18	160	800 ~ 1800	1500	0.8	4	1.20	160.0	0.70	Fig.11	
S3PDB161N08 ~ S3PDB161N18	161	800 ~ 1800	1500	0.8	4	1.20	160.0	0.71	Fig.30	
S3PDB180N08 ~ S3PDB180N18	180	800 ~ 1800	1800	0.8	3	1.20	180.0	0.65	Fig.11	Fig.11
S3PDB200N08 ~ S3PDB200N18	200	800 ~ 1800	2240	0.8	2.6	1.20	200.0	0.45	Fig.11	
S3PDB250N08 ~ S3PDB250N18	250	800 ~ 1800	2800	0.8	2.2	1.20	250.0	0.38	Fig.11	
S3PDBT75N08 ~ S3PDBT75N18	75	800 ~ 1800	910	0.8	10	1.20	75.0	0.4	Fig.74	Fig.74
S3PDBT100N08 ~ S3PDBT100N18	100	800 ~ 1800	1186	0.8	10	1.20	100.0	0.36	Fig.74	
S3PDBT150N08 ~ S3PDBT150N18	150	800 ~ 1800	1460	0.8	10	1.20	150.0	0.18	Fig.75	
S3PDBT200N08 ~ S3PDBT200N18	200	800 ~ 1800	1850	0.8	15	1.15	200.0	0.18	Fig.75	Fig.75

内部电路 Circuit

S3PDB

Ciruit 1

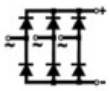

S3PDBT

Circuit 2

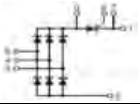

© 2023 ETATRONIC All rights reserved

Tel: +86-519-86800000 Fax: +86-519-83888666 E-mail: sales@etatronic.com www.etatronic.com

二极管-二极管整流模块
Diode-Diode Modules

E310749

型号 TYPE	电气特性Electrical Characteristics							封装外形 Package Style	外形图 Outlines
	I_{FAVM} @Tc=100℃	$V_R=V_{RRM}$	I_{FRMS}	I_{FSM}	V_{Fmax} at I_{FM}		R_{thJC}		
	A	V	A	A	V	A	K/W		
SDD36N08 ~ SDD36N18	36	800 ~ 1800	56	650	1.38	80	0.50	Fig.33	Fig.33
SDD36N08B ~ SDD36N18B	36	800 ~ 1800	56	650	1.38	80	0.60	Fig.2	
SDD60N08 ~ SDD60N18	60	800 ~ 1800	94	1150	1.60	200	0.295	Fig.33	Fig.2
SDD60N08B ~ SDD60N18B	60	800 ~ 1800	94	1150	1.60	200	0.395	Fig.2	
SDD70N08 ~ SDD70N18	70	800 ~ 1800	110	1400	1.48	200	0.255	Fig.33	
SDD70N08B ~ SDD70N18B	70	800 ~ 1800	110	1400	1.48	200	0.355	Fig.2	Fig.34
SDD100N08 ~ SDD100N18	100	800 ~ 1800	157	1700	1.60	300	0.175	Fig.33	
SDD100N08B ~ SDD100N18B	100	800 ~ 1800	157	1700	1.60	300	0.275	Fig.2	Fig.3
SDD120N08 ~ SDD120N18	120	800 ~ 1800	188	2800	1.43	300	0.13	Fig.33	
SDD120N08B ~ SDD120N18B	120	800 ~ 1800	188	2800	1.43	300	0.23	Fig.2	
SDD165N08 ~ SDD165N18	165	800 ~ 1800	260	4700	1.30	300	0.105	Fig.34	Fig.40
SDD165N08B ~ SDD165N18B	165	800 ~ 1800	260	4700	1.30	300	0.205	Fig.3	
SDD190N08 ~ SDD190N18	190	800 ~ 1800	300	6600	1.15	300	0.095	Fig.34	
SDD190N08B ~ SDD190N18B	190	800 ~ 1800	300	6600	1.15	300	0.195	Fig.3	Fig.17
SDD253N08BT ~ SDD253N18BT	253	800 ~ 1800	400	11000	1.25	750	0.27	Fig.40	
SDD320N08BT ~ SDD320N18BT	320	800 ~ 1800	500	11500	1.20	990	0.065	Fig.40	Fig.29
SDD600N08BT ~ SDD600N18BT	600	800 ~ 1800	942	19000	1.45	1800	0.045	Fig.17	
SDD800N08PT ~ SDD800N18PT	800	800 ~ 1800	1256	25000	1.45	2400	0.015	Fig.29	

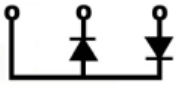
SDD

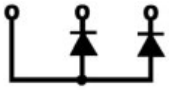
SDA

SDK

Suffix"B" means with Copper Baseplate

Suffix"BT" means Pressure Contact Technology with BusBar Terminal

Suffix"PT" means Pressure Contact Technology with Screw Terminal

© 2023 ETATRONIC All rights reserved

Tel: +86-519-86800000 Fax: +86-519-83888666 E-mail: sales@etatronic.com www.etatronic.com

绝缘式和不绝缘式双向可控硅

Isolated and Non-Isolated Triacs

型号 TYPE	电气特性Electrical Characteristics											封装外形 Package Style	外形图 Outlines
	I_{TRMS}	V_{DRM} /V_{RRM}	I_{GT}	V_{GT}	I_{DRM} /I_{RRM}	V_{TM}	I_H	I^2T	I_{TSM}	dv/dt	R_{thJC}		
	A	V	mA	V	mA	V	mA	A^2S	A	V/μs	°C/W		
BTA04-200 ~ BTA04-1000	4	200 ~ 1000	5~10	1.3	0.01	1.55	15	3	25	50	3.7	TO-220AB	TO-220AB
BTA06-200 ~ BTA06-1000	6	200 ~ 1000	6~25	1.3	0.05	1.55	15	7.8	60	50	2.2	TO-220AB	
BTA08-200 ~ BTA08-1000	8	200 ~ 800	6~25	1.3	0.10	1.55	15	12	80	50	1.8	TO-220AB	
BTA12-200 ~ BTA12-1000	12	200 ~ 1000	6~35	1.3	0.10	1.55	35	55	100	500	1.5	TO-220AB	TO-218
BTA16-200 ~ BTA16-1000	16	200 ~ 1000	10~35	1.3	0.10	1.55	35	144	160	500	1.2	TO -220AB	
BTB16-200 ~ BTB16-1200	15	200 ~ 1200	10~50	1.3	0.10	1.55	50	144	160	500	1.20	TO-220AB Non-Isolated	TO-247AD
BTA24-200 ~ BTA24-1000	24	200 ~ 1000	10~50	1.3	0.10	1.55	50	340	250	500	0.8	TO-220AB	
BTB24-200 ~ BTB24-1200	24	200 ~ 1200	10~50	1.3	0.10	1.55	75	340	250	500	0.80	TO-220AB Non-Isolated	
BTA26-200 ~ BTA26-1000	26	200 ~ 1000	10~50	1.3	0.10	1.55	50	340	250	500	0.8	TO-218 / TOP3	Fig.48
BTB26-200 ~ BTB26-1200	26	200 ~ 1200	10~50	1.3	0.10	1.55	75	340	250	500	0.80	TO-247AD Non-Isolated	
BTA41-200 ~ BTA41-1600	41	200 ~ 1600	10~50	1.3	0.20	1.55	180	880	400	500	0.6	TO-218 / TOP3	
BTB41-200 ~ BTB41-1600	41	200 ~ 1600	10~50	1.3	0.20	1.55	180	880	400	500	0.60	TO-247AD Non-Isolated	Fig.22
SBTA25G04B ~ SBTA25G12B	25	400 ~ 1200	10~50	1.3	0.10	1.55	50	340	250	500	1.6	Fig.48	
SBTA35G04B ~ SBTA35G12B	35	400 ~ 1200	10~50	1.3	0.10	1.55	120	664	335	500	1.5	Fig.48	SOT-227
SBTA41G04B ~ SBTA41G12B	41	400 ~ 1200	10~50	1.3	0.20	1.55	180	880	400	500	1.3	Fig.48	
SBTA70G04A ~ SBTA70G12A	70	400 ~ 1200	10~50	1.3	0.2	1.55	100	6000	750	500	1.2	Fig.22	
SBTA100GK06S ~ SBTA100GK18S	100	600 ~ 1800	10~150	1.3	0.2	1.55	100	22000	2100	500	1.1	SOT-227	Fig.38
SBTA101GK06 ~ SBTA101GK18	100	600 ~ 1800	10~150	1.3	0.2	1.55	100	22000	2100	500	0.9	Fig.38	

Suffix " A " means with Aluminium Baseplate, Suffix " B " means with Copper Baseplate

Electrical Isolation from Leads to Mounting Tab ≥ 2500VAC (RMS) 1min

© 2023 ETATRONIC All rights reserved

Tel: +86-519-86800000 Fax: +86-519-83888666 E-mail: sales@etatronic.com www.etatronic.com

碳化硅SiC肖特基二极管分立器件
SiC Schottky Diode Discretes

型号 TYPE	电气特性Electrical Characteristics						封装外形 Package Style	内部电路 Circuits	外形图 Outlines
	$V_R=V_{RRM}$	I_{FAV}	I_{FSM}	V_F	I_{RRM}	T_{JMAX}			
	V	A	A	V	u A	℃			
SCD0665A11	650	6	60.00	1.27	1.00	175	TO-220F-2L	1	
SCD0665A21	650	6	60.00	1.27	1.00	175	TO-220AC	1	TO-220F-2L
SCD0865A11	650	8	72.00	1.40	1.00	175	TO-220F-2L	1	
SCD0865A21	650	8	72.00	1.40	1.00	175	TO-220AC	1	
SCD1065A11	650	10	90.00	1.40	1.00	175	TO-220F-2L	1	
SCD1065A21	650	10	90.00	1.40	1.00	175	TO-220AC	1	TO-220AC
SCD2065A21	650	20	170.00	1.40	1.50	175	TO-220AC	1	
SCD1265CTA1	650	2X6	2X60	1.40	1.00	175	TO-220F	2	
SCD1265CTA2	650	2X6	2X60	1.40	1.00	175	TO-220AB	2	
SCD1665CTA1	650	2x8	2X72	1.40	1.00	175	TO-220F	2	
SCD1665CTA2	650	2x8	2X72	1.40	1.00	175	TO-220AB	2	
SCD2065PTB2	650	2x10	2X100	1.40	1.00	175	TO-247AD	2	TO-220AB
SCD4065PTB2	650	2x20	2X180	1.40	1.50	175	TO-247AD	2	
SCD03120A11	1200	3	30.00	1.55	1.00	175	TO-220F-2L	1	
SCD03120A21	1200	3	30.00	1.55	1.00	175	TO-220AC	1	
SCD10120A11	1200	10	100.00	1.55	1.00	175	TO-220-2L	1	
SCD10120A21	1200	10	100.00	1.55	1.00	175	TO-220AC	1	
SCD15120A21	1200	15	150.00	1.55	1.50	175	TO-220AC	1	TO-220F-3L
SCD15120B21	1200	15	150.00	1.55	1.50	175	TO-247AC	1	
SCD20120A21	1200	20	180.00	1.60	3.00	175	TO-220AC	1	
SCD20120B21	1200	20	180.00	1.60	3.00	175	TO-247AC	1	
SCD30120B21	1200	30	240.00	1.60	5.00	175	TO-247AC	1	TO-247AC
SCD40120B21	1200	40	280.00	1.60	5.00	175	TO-247AC	1	
SCD50120B21	1200	50	350.00	1.60	8.00	175	TO-247AC	1	
SCD06120CTA1	1200	2X3	2x30	1.55	1.00	175	TO-220F	2	
SCD06120CTA2	1200	2X3	2X30	1.55	1.00	175	TO-220AB	2	
SCD20120CTA1	1200	2X10	2X100	1.55	1.00	175	TO-220F	2	TO-247AD
SCD20120CTA2	1200	2X10	2X100	1.55	1.00	175	TO-220AB	2	
SCD30120PTB2	1200	2X15	2X150	1.60	1.50	175	TO-247AD	2	
SCD40120PTB2	1200	2X20	2X180	1.60	3.00	175	TO-247AD	2	
SCD60120PTB2	1200	2X30	2X240	1.60	5.00	175	TO-247AD	2	
SCD80120PTB2	1200	2X40	2X280	1.60	5.00	175	TO-247AD	2	
SCD100120PTB2	1200	2X50	2X350	1.60	8.00	175	TO-264	2	TO-264

内部电路Circuit

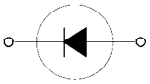

Circuit 1

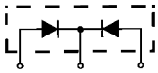

Circuit 2

© 2023 ETATRONIC All rights reserved
Tel: +86-519-86800000 Fax: +86-519-83888666 E-mail: sales@etatronic.com www.etatronic.com

Outline Drawings

Fig. 1 (**C1**)

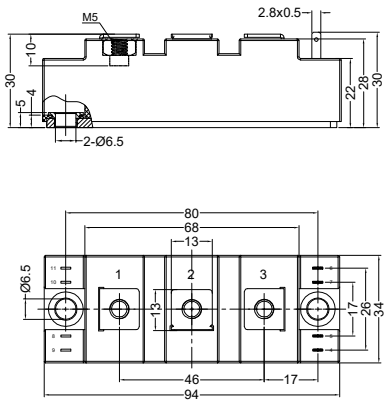

Fig. 2 (**AAP**)

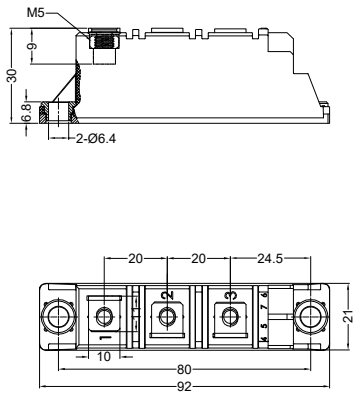

Fig. 3 (**IAP**)

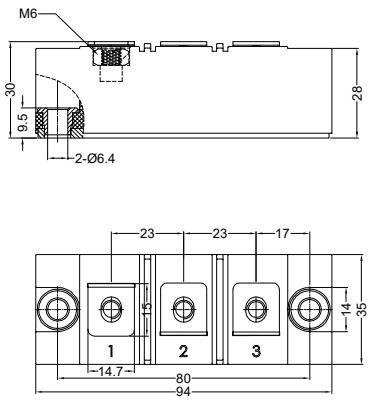

Fig. 4 (**IAP**)

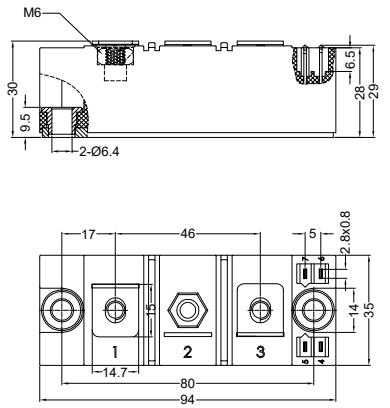

Fig. 5 (**C5**)

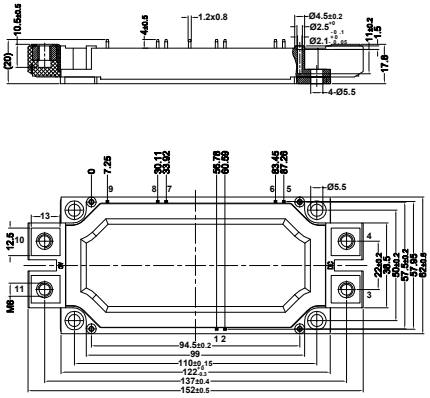

Fig. 6

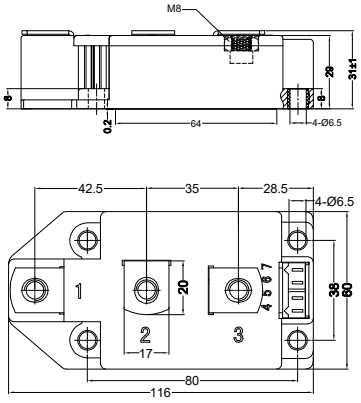

Fig. 7

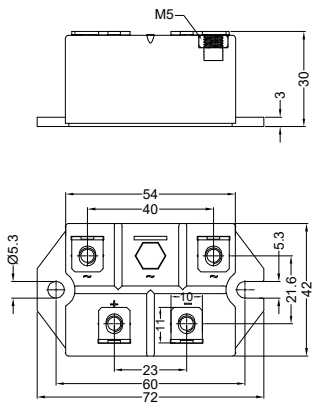

Fig. 8

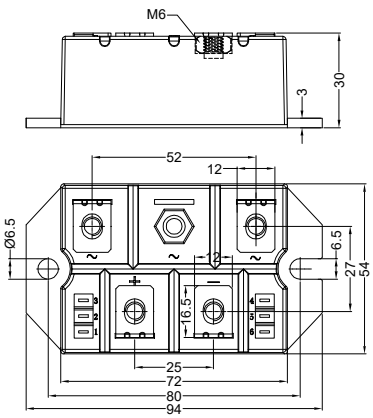

Fig. 9

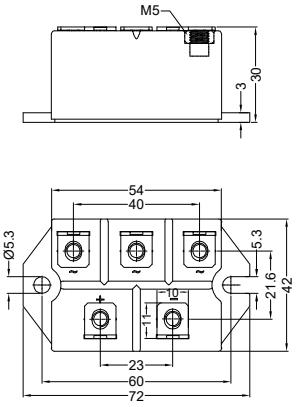

© 2023 ETATRONIC All rights reserved

Tel: +86-519-86800000 Fax: +86-519-83888666 E-mail: sales@etatronic.com www.etatronic.com

Outline Drawings

Fig. 10

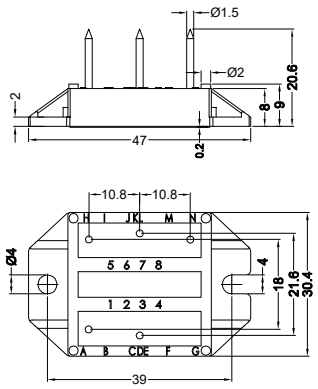

Fig. 11

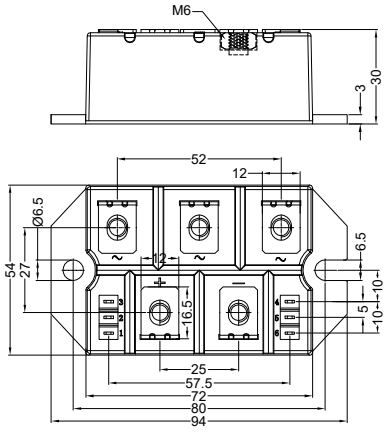

Fig. 12 (**AAP**)

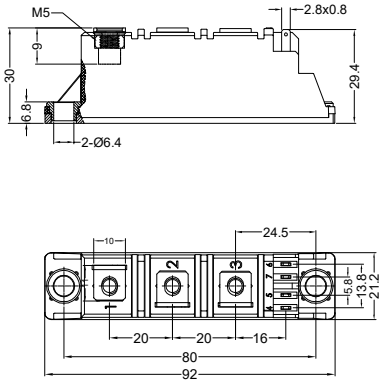

Fig. 13

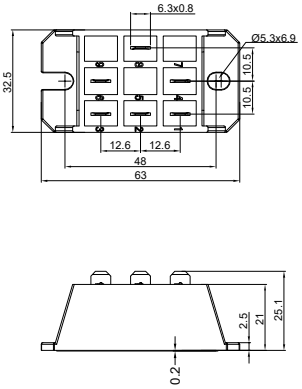

Fig. 14 (**IAP**)

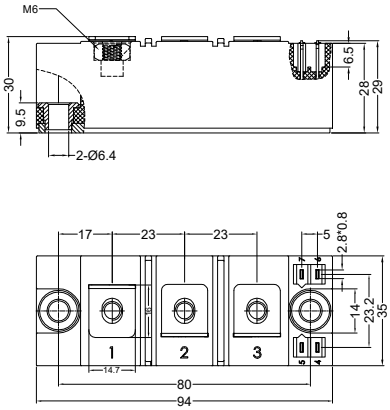

Fig. 15

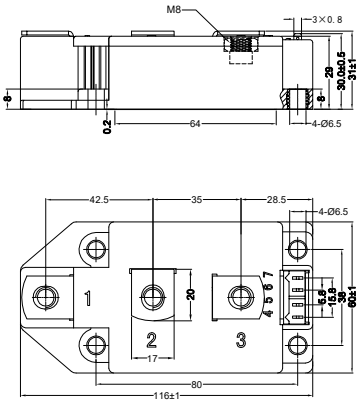

Fig. 16 (**C9**)

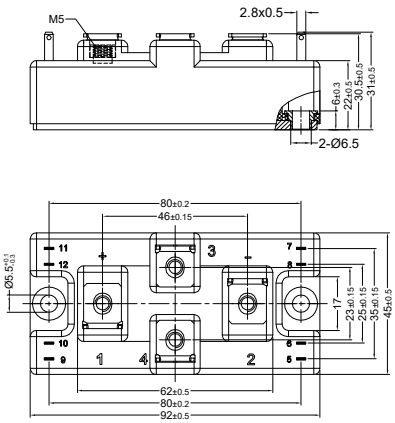

Fig. 17

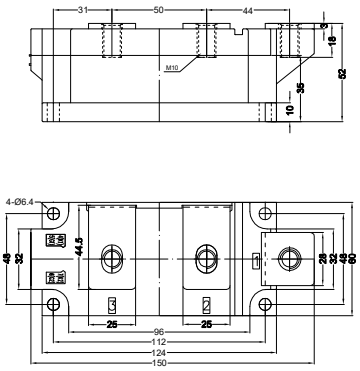

Fig. 18 (**AAP**)

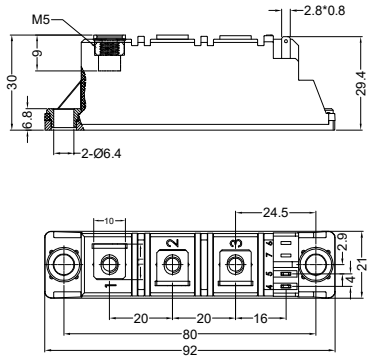

© 2023 ETATRONIC All rights reserved

Tel: +86-519-86800000 Fax: +86-519-83888666 E-mail: sales@etatronic.com www.etatronic.com

Outline Drawings

Fig. 19

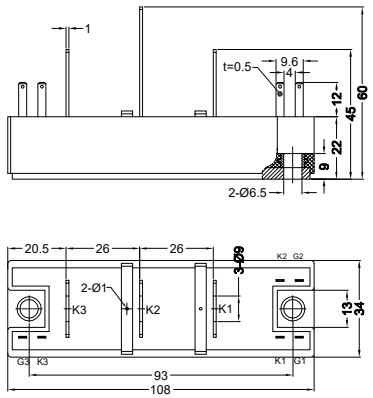

Fig. 20 (**IAP**)

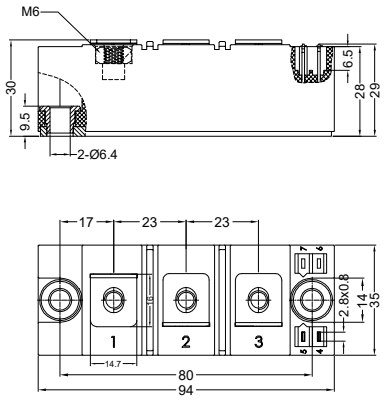

Fig. 21

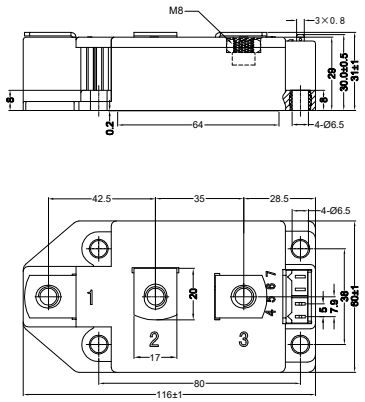

Fig. 22

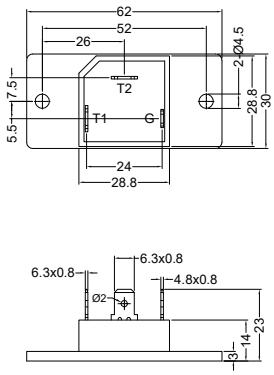

Fig. 23 (**AAP**)

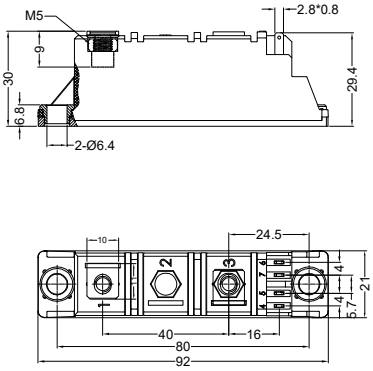

Fig. 24

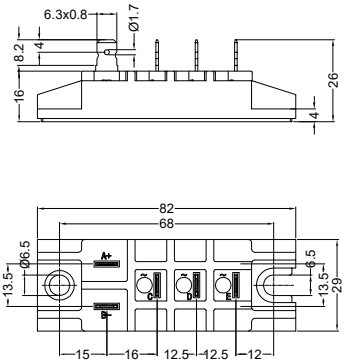

Fig. 25

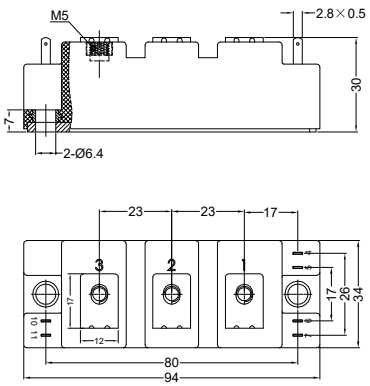

Fig. 26 (**C2**)

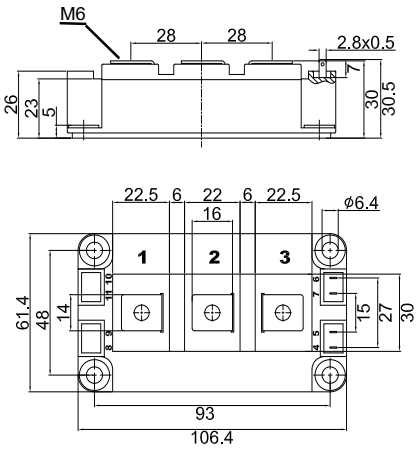

Fig. 27

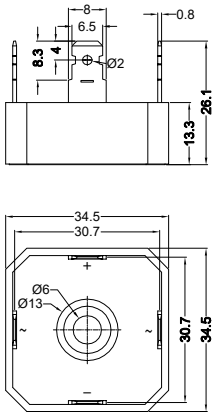

© 2023 ETATRONIC All rights reserved

Tel: +86-519-86800000 Fax: +86-519-83888666 E-mail: sales@etatronic.com www.etatronic.com

Outline Drawings

Fig. 28

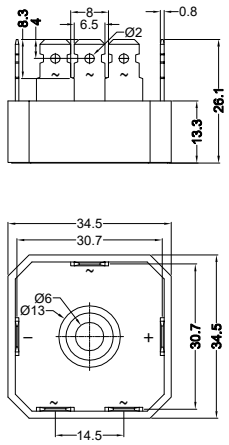

Fig.29

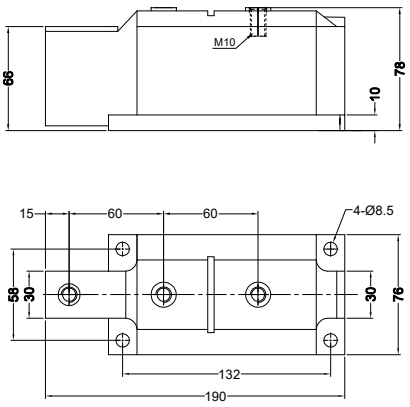

Fig. 30

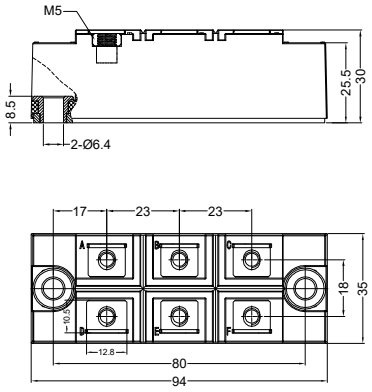

Fig. 31 (**TO-240**)

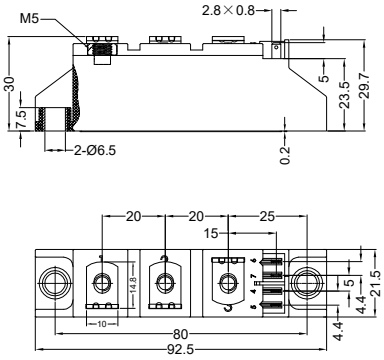

Fig. 32

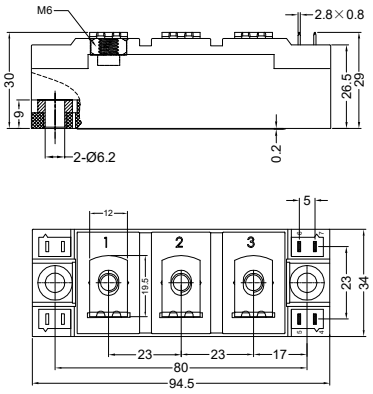

Fig. 33 (**TO-240**)

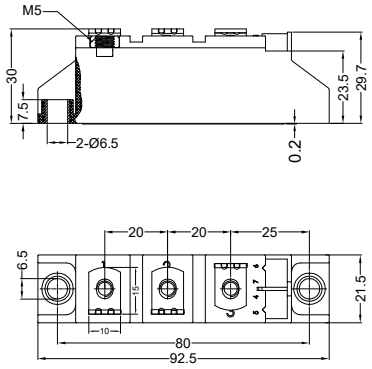

Fig. 34

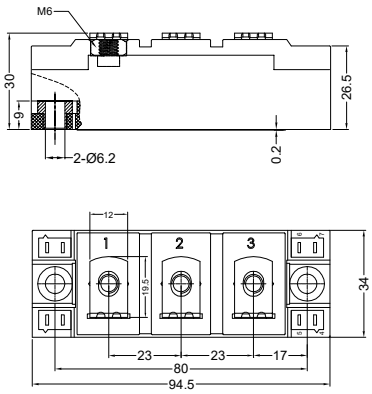

Fig. 35

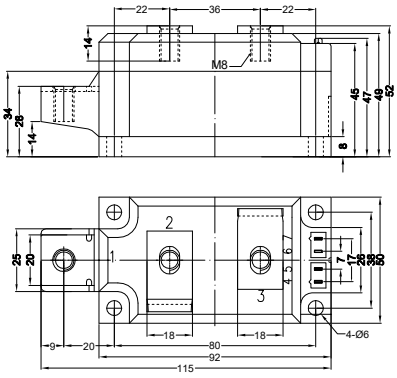

Fig. 36 (**TO-240**)

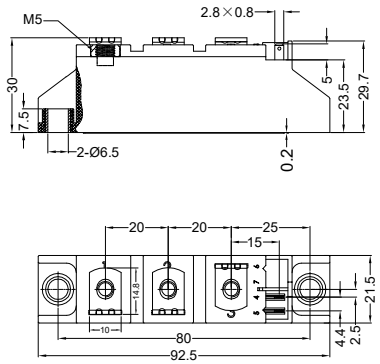

© 2023 ETATRONIC All rights reserved

Tel: +86-519-86800000 Fax: +86-519-83888666 E-mail: sales@etatronic.com www.etatronic.com

Outline Drawings

Fig. 37

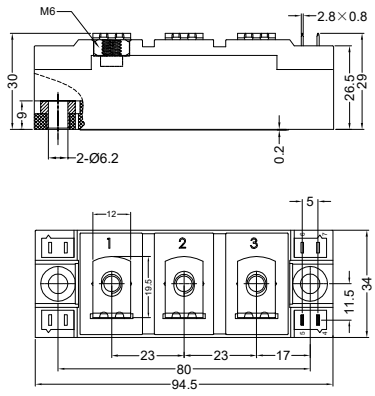

Fig. 38 (**TO-240**)

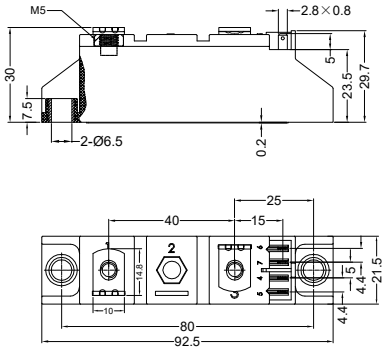

Fig. 39

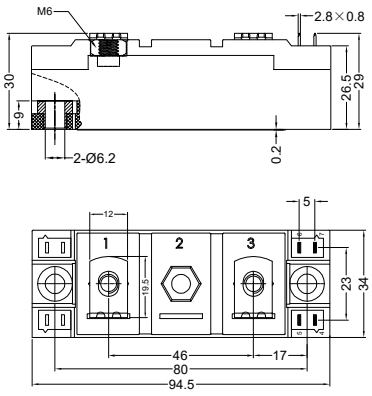

Fig. 40

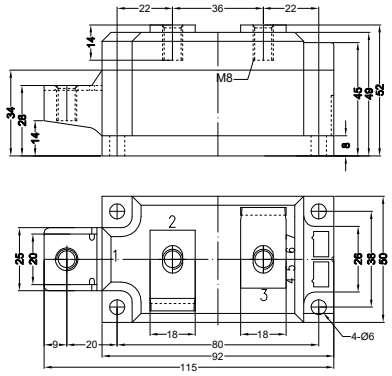

Fig. 41

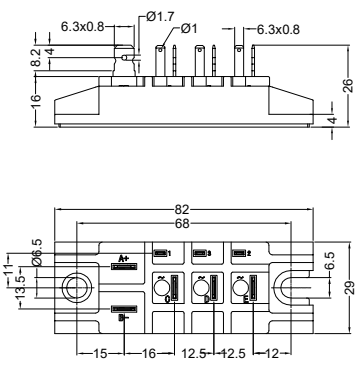

Fig. 42

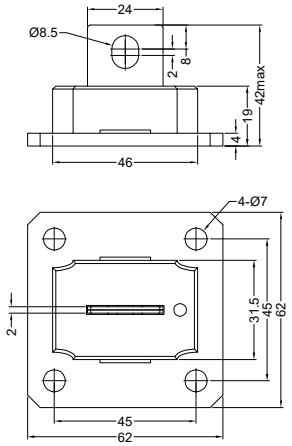

Fig. 43

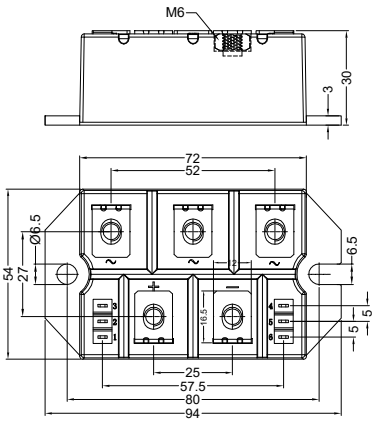

Fig. 44 (**D2**)

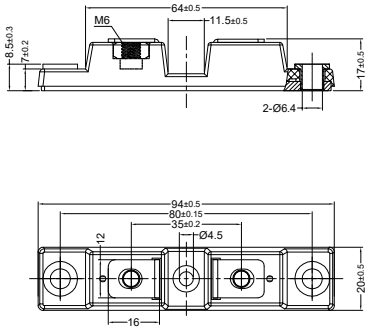

Fig.45 (**D1**)

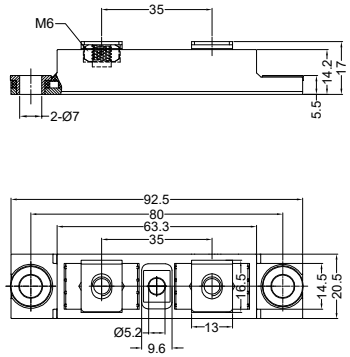

© 2023 ETATRONIC All rights reserved

Tel: +86-519-86800000 Fax: +86-519-83888666 E-mail: sales@etatronic.com www.etatronic.com

Outline Drawings

Fig. 46

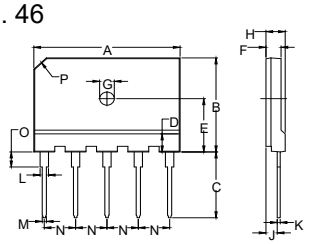

Dim.	Millimeter	
	Min.	Max.
A	34.70	35.30
B	24.70	25.30
C	17.00	18.00
D	4.50	5.10
E	13.85	14.45
F	3.40	3.65
G	Ø3.1	Ø3.5
H	4.40	4.70
J	2.50	2.80
K	0.60	0.75
L	2.00	2.20
M	0.90	1.10
N	7.00	8.00
O	3.80	4.20
P	-	C3

Fig. 47

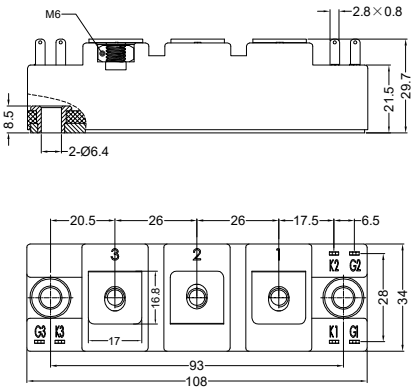

Fig. 48

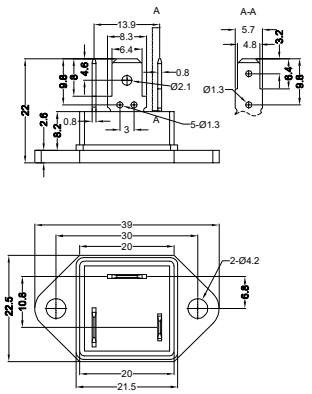

Fig. 49

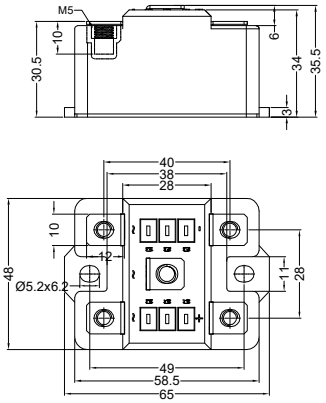

Fig. 50

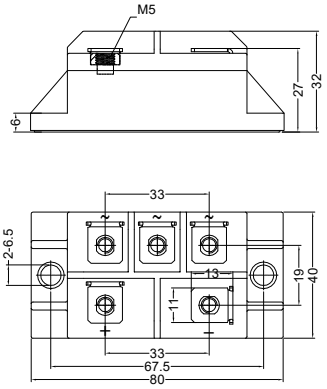

Fig. 51

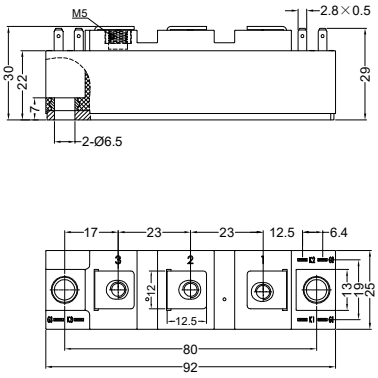

Fig. 52 (**D3**)

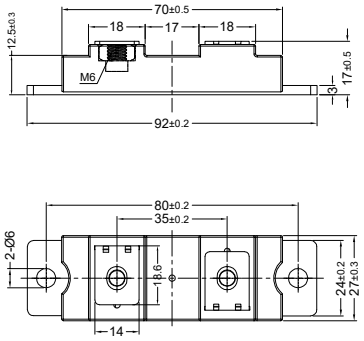

Fig. 53 (**D4**)

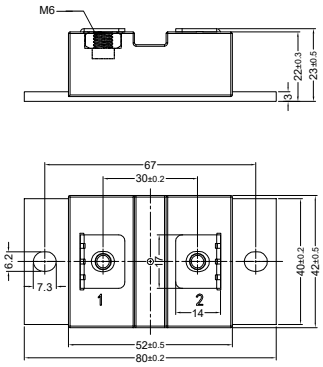

Fig. 54 (**TO-247P**)

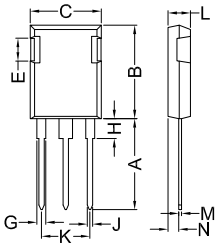

Dim.	Millimeter		Inches	
	Min.	Max.	Min.	Max.
A	19.81	20.32	0.780	0.800
B	20.80	21.46	0.819	0.845
C	15.75	16.26	0.610	0.640
E	4.32	5.49	0.170	0.216
F	5.4	6.3	0.212	0.248
G	1.65	2.13	0.065	0.084
H	3.80	4.5	0.149	0.177
J	1.0	1.4	0.040	0.055
K	10.8	11.1	0.426	0.437
L	4.7	5.3	0.185	0.209
M	0.4	0.8	0.016	0.031
N	1.5	2.49	0.087	0.102

© 2023 ETATRONIC All rights reserved
Tel: +86-519-86800000 Fax: +86-519-83888666 E-mail: sales@etatronic.com www.etatronic.com

Outline Drawings

Fig. 55

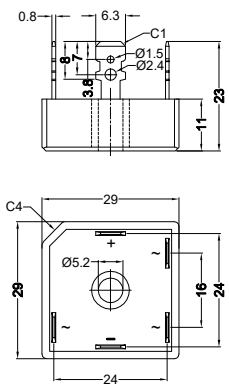

Fig. 56

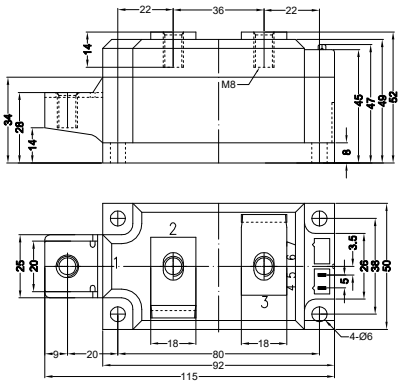

Fig. 57

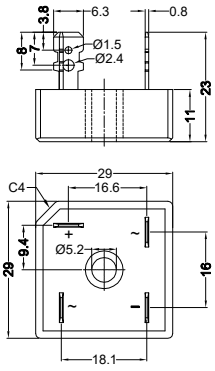

Fig. 58 (**C3**)

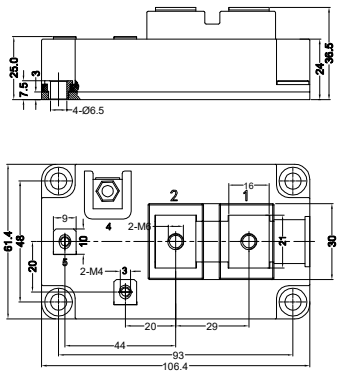

Fig. 59

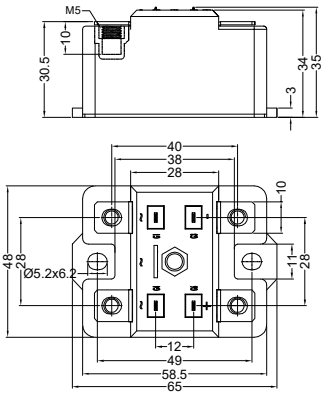

Fig. 60 (**D5**)

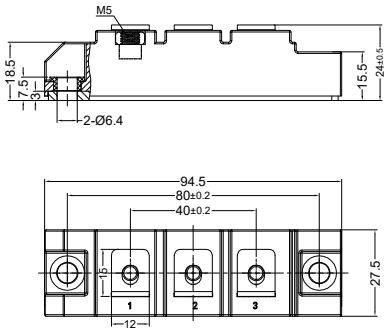

Fig. 61 (**C6**)

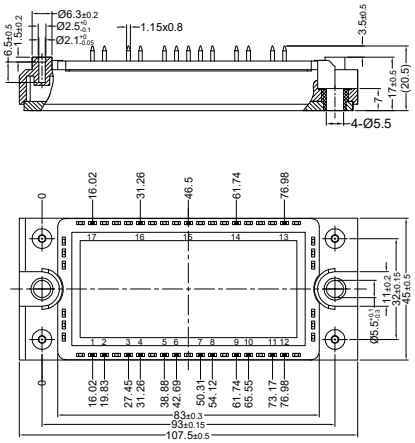

Fig. 62 (**C6A**)

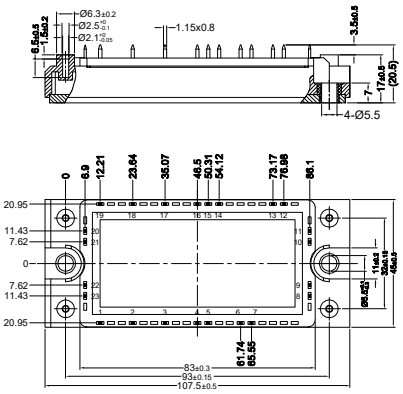

Fig. 63 (**C6B**)

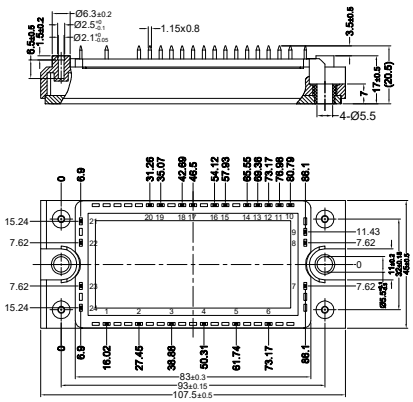

© 2023 ETATRONIC All rights reserved

Tel: +86-519-86800000 Fax: +86-519-83888666 E-mail: sales@etatronic.com www.etatronic.com

Outline Drawings

Fig. 64 (**C7**)

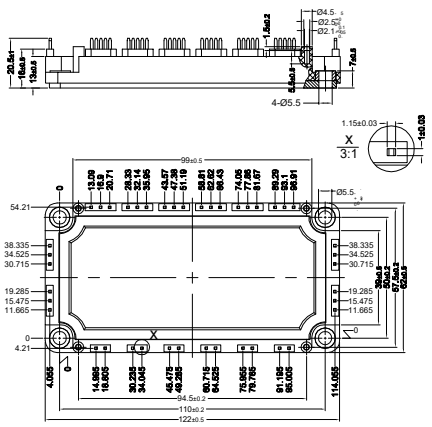

Fig. 65 (**C7.1**)

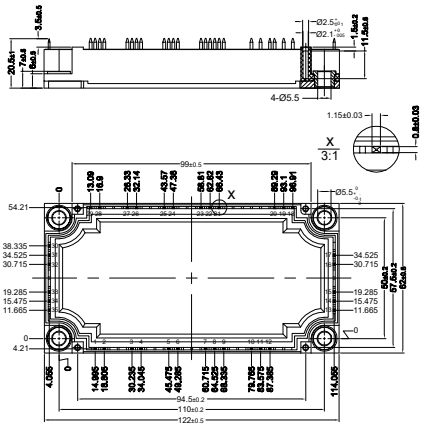

Fig. 66

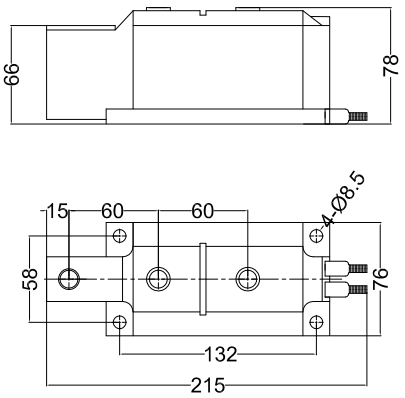

Fig. 67 (**C7.2**)

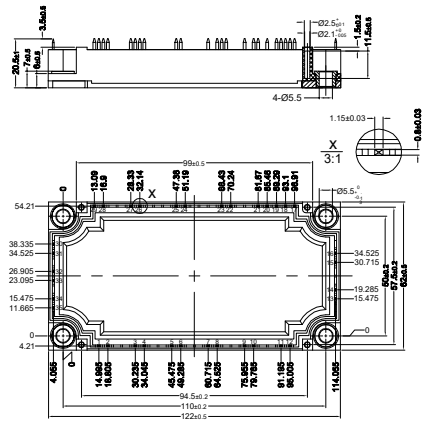

Fig. 68 (**C7.3**)

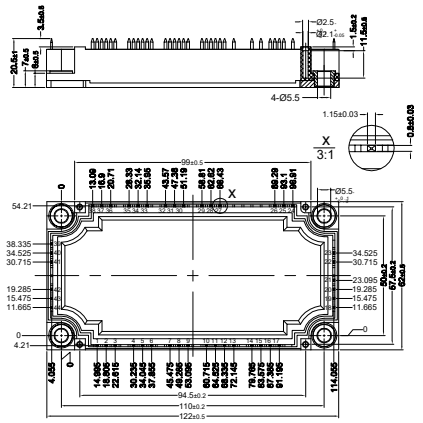

Fig. 69 (**P1**)

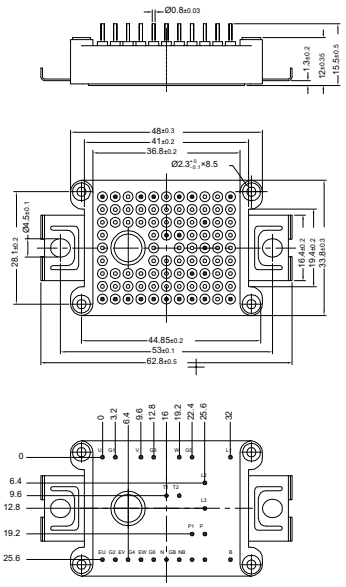

Fig. 70 (**P2**)

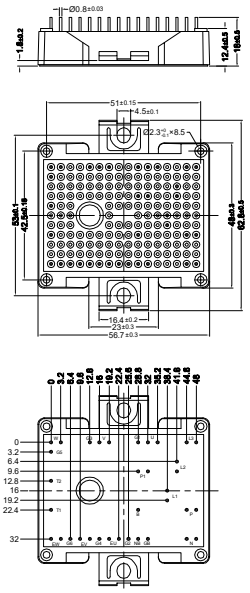

Fig. 71

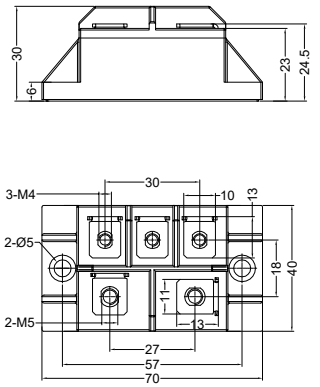

Fig. 72 (**SOT-23-3L**)

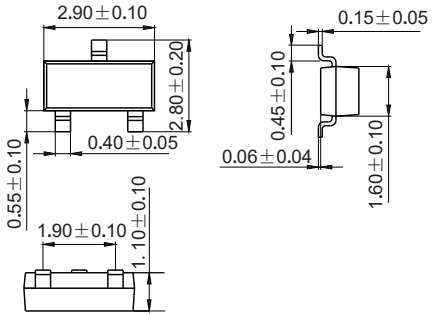

© 2023 ETATRONIC All rights reserved

Tel: +86-519-86800000 Fax: +86-519-83888666 E-mail: sales@etatronic.com www.etatronic.com

Outline Drawings

Fig. 73

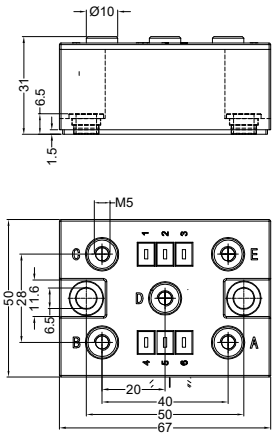

Fig. 74

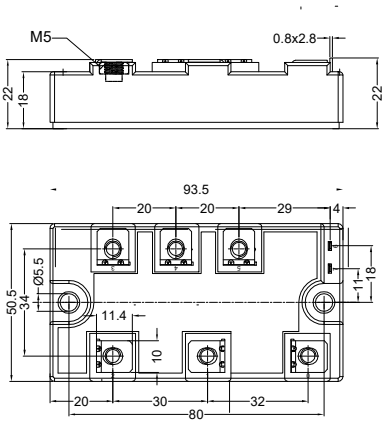

Fig. 75

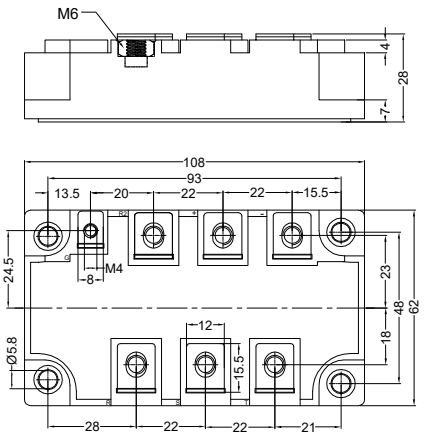

Fig.76 (**TO-264**)

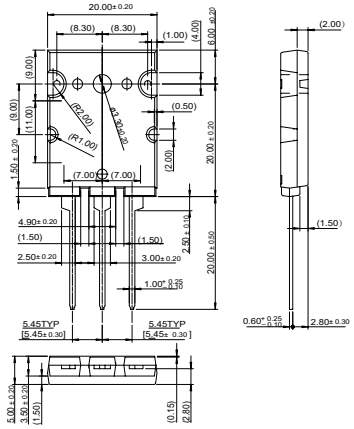

Fig.77 (**TO-220AB**)

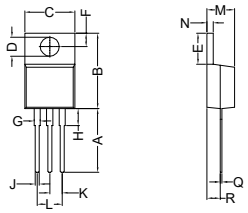

Dim.	Millimeter	
	Min.	Max.
A	12.70	13.97
B	14.73	16.00
C	9.91	10.66
ØD	3.54	4.08
E	5.85	6.85
F	2.54	3.18
G	1.15	1.65
H	2.79	5.84
J	0.64	1.01
K	2.45	BSC
L	5.05	BSC
M	4.32	4.82
N	1.14	1.39
Q	0.35	0.56
R	2.29	2.79

Fig.78 (**TO-220AC**)

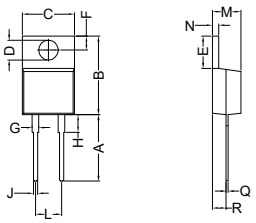

Dim.	Millimeter	
	Min.	Max.
A	12.70	13.97
B	14.73	16.00
C	9.91	10.66
ØD	3.54	4.08
E	5.85	6.85
F	2.54	3.18
G	1.15	1.65
H	2.79	5.84
J	0.64	1.01
L	5.05	BSC
M	4.32	4.82
N	1.14	1.39
Q	0.35	0.56
R	2.29	2.79

Fig.79 (**TO-247AD)**

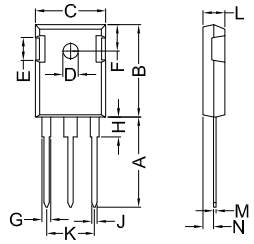

Dim.	Millimeter		Inches	
	Min.	Max.	Min.	Max.
A	19.81	20.32	0.780	0.800
B	20.80	21.46	0.819	0.845
C	15.75	16.26	0.610	0.640
ØD	3.15	3.65	0.124	0.144
E	4.32	5.49	0.170	0.216
F	5.4	6.3	0.212	0.248
G	1.65	2.18	0.065	0.086
H	3.80	4.5	0.149	0.177
J	1.0	1.4	0.040	0.055
K	10.8	11.1	0.426	0.437
L	4.7	5.3	0.185	0.209
M	0.4	0.8	0.016	0.031
N	1.5	2.49	0.087	0.102

Fig.80 (**TO-247AC**)

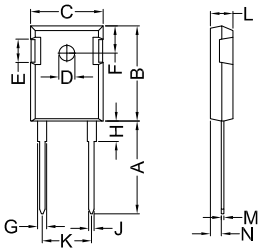

Dim.	Millimeter		Inches	
	Min.	Max.	Min.	Max.
A	19.81	20.32	0.780	0.800
B	20.80	21.46	0.819	0.845
C	15.75	16.26	0.610	0.640
ØD	3.15	3.65	0.124	0.144
E	4.32	5.49	0.170	0.216
F	5.4	6.3	0.212	0.248
G	1.65	2.13	0.065	0.084
H	3.80	4.5	0.149	0.177
J	1.0	1.4	0.040	0.055
K	10.8	11.1	0.426	0.437
L	4.7	5.3	0.185	0.209
M	0.4	0.8	0.016	0.031
N	1.5	2.49	0.087	0.102

Fig.81 (**TO-218 / TOP3**)

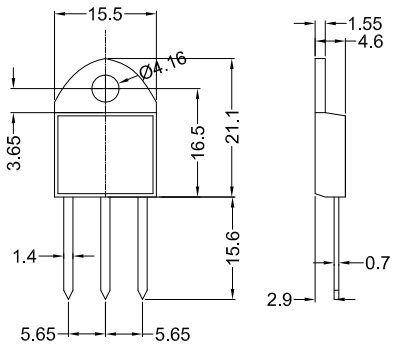

© 2023 ETATRONIC All rights reserved

Tel: +86-519-86800000 Fax: +86-519-83888666 E-mail: sales@etatronic.com www.etatronic.com

Outline Drawings

Fig.82 (**SOT-227 / ISOTOP**)

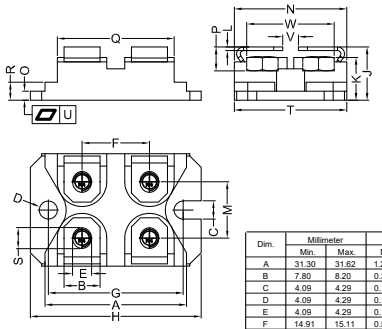

Dim.	Millimeter		Inches	
	Min.	Max.	Min.	Max.
A	31.30	31.62	1.232	1.245
B	7.80	8.20	0.307	0.323
C	4.09	4.29	0.161	0.169
D	4.09	4.29	0.161	0.169
E	4.09	4.29	0.161	0.169
F	14.91	15.11	0.587	0.595
G	30.12	30.30	1.186	1.193
H	38.20	38.56	1.504	1.518
J	12.30	12.90	0.484	0.507
K	8.92	9.60	0.351	0.378
L	0.76	0.84	0.030	0.033
M	12.20	14.00	0.480	0.551
N	25.15	25.62	0.990	1.008
O	1.98	2.13	0.078	0.084
P	4.15	4.62	0.163	0.181
Q	25.90	26.30	1.019	1.035
R	3.94	4.42	0.155	0.174
S	4.45	4.85	0.175	0.191
T	24.59	25.07	0.968	0.987
U	0.05	0.10	0.002	0.004
V	3.00	4.80	0.118	0.189
W	19.81	21.08	0.780	0.830

Fig.83 (**GBJ / RS6M**)

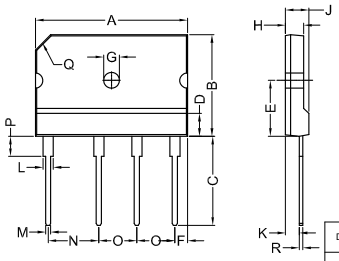

Dim.	Millimeter	
	Min.	Max.
A	29.70	30.30
B	19.70	20.30
C	17.0	18.0
D	4.70	4.90
E	10.80	11.20
F	2.30	2.70
ØG	Ø3.00	Ø3.4
H	3.40	3.80
J	4.40	4.80
K	2.50	2.90
L	2.00	2.40
M	0.90	1.10
N	9.80	10.20
O	7.30	7.70
P	3.80	4.20
Q	-	C3
R	0.80	1.00

Fig.84 (**TO-263 / D²PAK**)

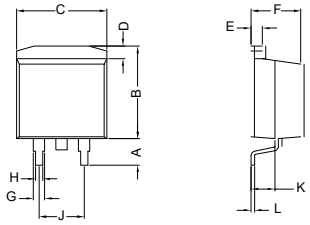

Dim.	Millimeter		Inches	
	Min.	Max.	Min.	Max.
A	5.00	5.60	0.197	0.220
B	9.32	10.52	0.337	0.414
C	9.60	10.4	0.378	0.409
D	1.20	1.40	0.047	0.055
E	1.30	1.50	0.051	0.059
F	4.32	4.82	0.170	0.190
G	1.15	1.65	0.045	0.065
H	0.64	1.01	0.025	0.040
J	4.50	5.10	0.177	0.200
K	2.30	3.00	0.090	0.118
L	0.30	0.35	0.012	0.014

Fig. 85 (**TO-220F-2L**)

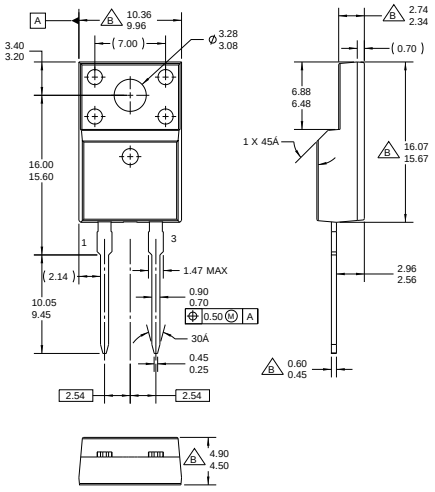

Fig. 86 (**TO-220F-3L**)

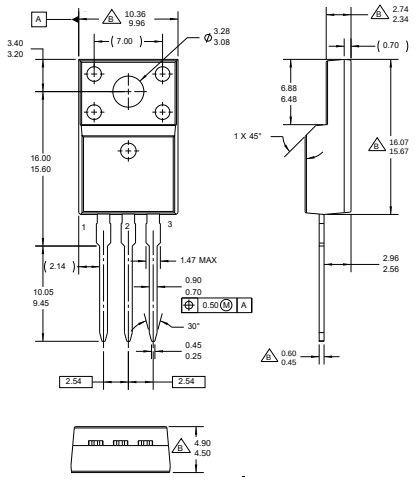

Fig. 87 （**TO-251)**

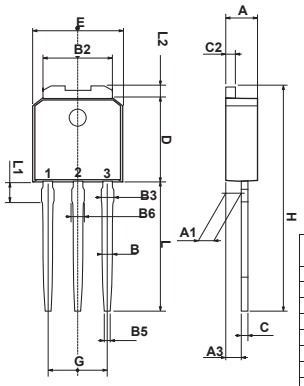

DIM.	mm		
	MIN.	TYP.	MAX.
A	2.2		2.4
A1	0.9		1.1
A3	0.7		1.3
B	0.64		0.9
B2	5.2		5.4
B3			0.85
B5		0.3	
B6			0.95
C	0.45		0.6
C2	0.48		0.6
D	6		6.2
E	6.4		6.6
G	4.4		4.6
H	15.9		16.3
L	9		9.4
L1	0.8		1.2
L2		0.8	1

Fig. 88 (**TO-252**)

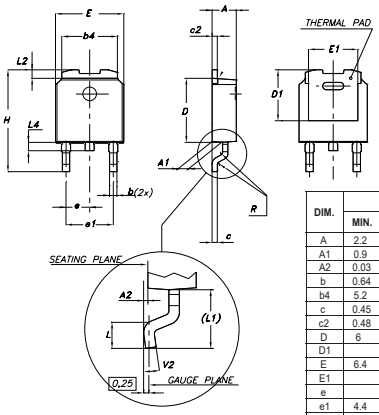

DIM.	mm.		
	MIN.	TYP	MAX.
A	2.2		2.4
A1	0.9		1.1
A2	0.03		0.23
b	0.64		0.9
b4	5.2		5.4
c	0.45		0.6
c2	0.48		0.6
D	6		6.2
D1		5.1	
E	6.4		6.6
E1		4.7	
e		2.28	
e1	4.4		4.6
H	9.35		10.1
L	1		
(L1)		2.8	
L2		0.8	
L4	0.6		1
R		0.2	
V2	0°		8°

Fig. 89 (**TO-3PF**)

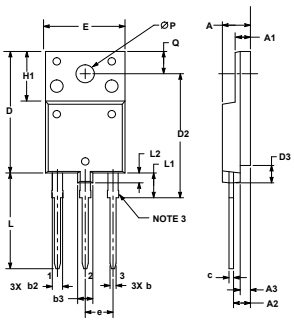

DIM	MILLIMETERS	
	MIN	MAX
A	5.30	5.70
A1	2.80	3.20
A2	3.10	3.50
A3	1.80	2.20
b	0.65	0.95
b2	1.90	2.15
b3	3.80	4.20
c	0.80	1.10
D	24.30	24.70
D2	24.70	25.30
D3	3.30	3.70
E	15.30	15.70
e	5.35	5.55
H1	9.80	10.20
L	19.10	19.50
L1	4.80	5.20
L2	1.90	2.20
P	3.40	3.80
Q	4.30	4.70

Fig. 90

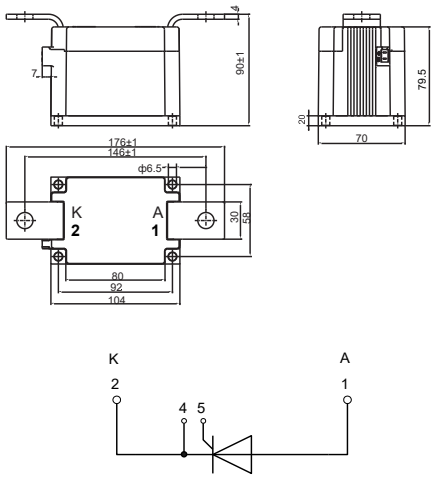

© 2023 ETATRONIC All rights reserved

Tel: +86-519-86800000 Fax: +86-519-83888666 E-mail: sales@etatronic.com www.etatronic.com